LEGEND

- UTILITY SECURITY FIXTURE: (2) HALOGEN PAR FLOOD LIGHTS. MOTION SENSOR WITH OPTIONAL SWITCH
- 1x4 UTILITY FLUORESCENT FIXTURE (NO LENS) WITH (2) DAYLIGHT LAMPS. HANG FROM TRUSS ABOVE
- DUPLEX RECEPTACLE
- WP DUPLEX RECEPTACLE WITH WEATHERPROOF CAP, GFI. SURFACE MOUNT
- LIGHT SWITCH
- EXTERIOR WALL SCONCE, SELECTED BY OWNER

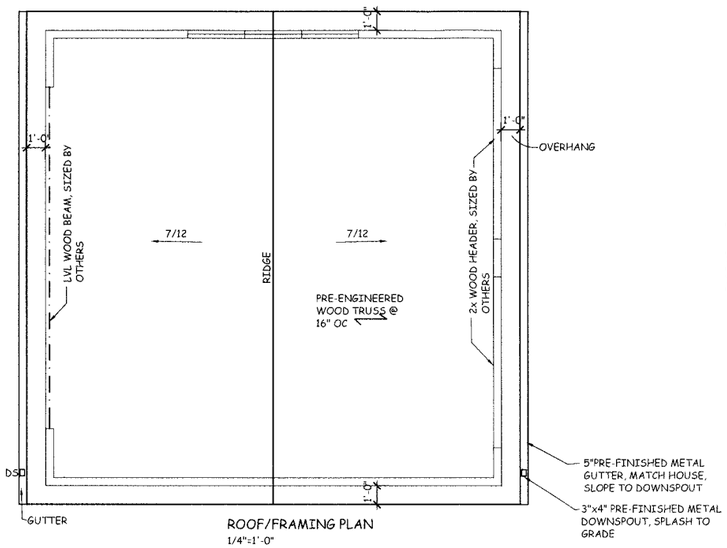

ROOF/FRAMING PLAN
1/4"=1'-0"

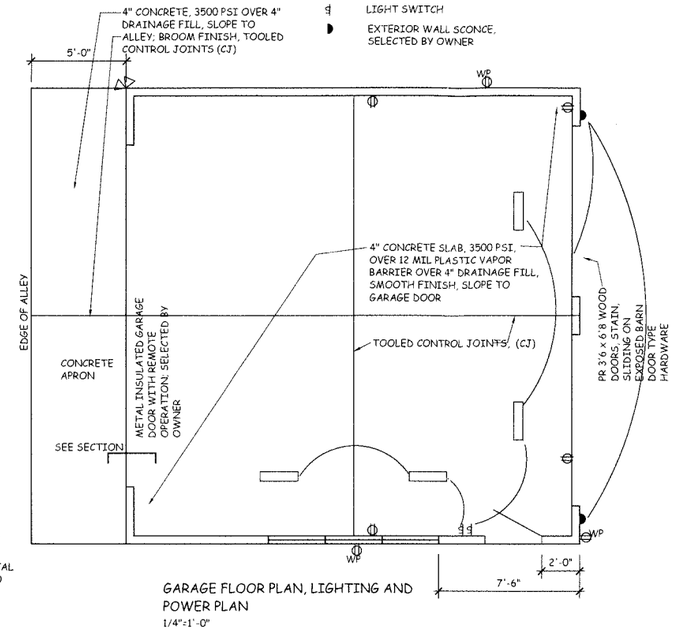

GARAGE FLOOR PLAN, LIGHTING AND POWER PLAN
1/4"=1'-0"

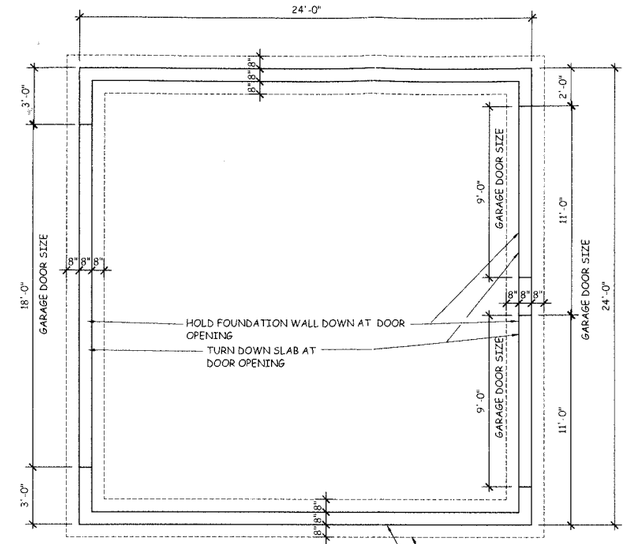

FOUNDATION PLAN
1/4"=1'-0"

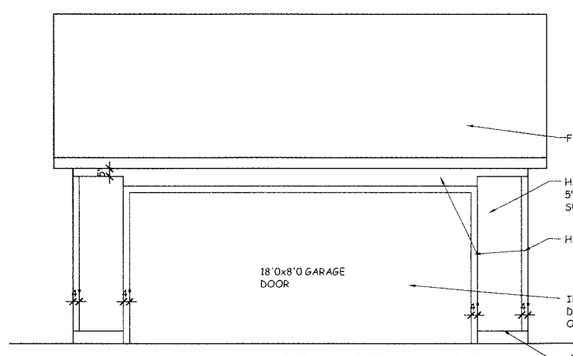

FRONT ELEVATION (ALLEY SIDE)
1/4"=1'-0"

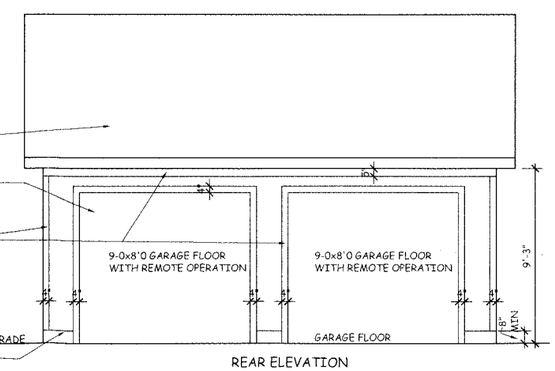

REAR ELEVATION
1/4"=1'-0"

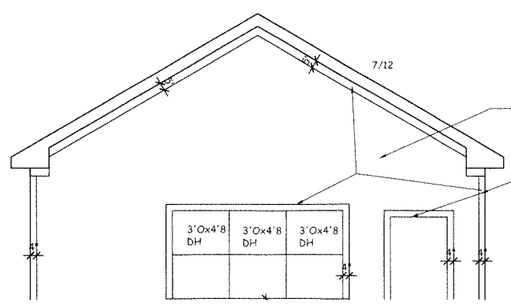

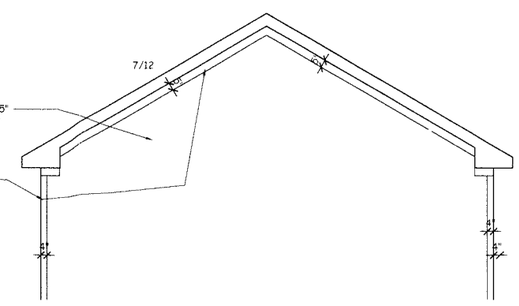

RECEIVED
NOV 08 2017
PLANNING &
DESIGN SERVICES

Anne Del Prince, Architect
640 Country Club Road
Louisville, KY 40206

MacLean Garage
2214 Boulevard Napoleon
Louisville, KY 40205

Plans
Elevations