PRELIMINARY APPROVAL
Condition of Approval:
Development Review — Date 4-5-17
LOUISVILLE & JEFFERSON COUNTY METROPOLITAN SEWER DISTRICT

LOUISVILLE METRO PLANNING COMMISSION
APPROVED DISTRICT DEVELOPMENT PLAN
DOCKET NO. 17zone1000
APPROVAL DATE
EXPIRATION DATE
SIGNATURE OF PLANNING COMMISSION

PRELIMINARY APPROVAL DEVELOPMENT PLAN
CONDITIONS:
BY:
DATE: 4-5-17
LOUISVILLE/ JEFFERSON COUNTY METRO PUBLIC WORKS

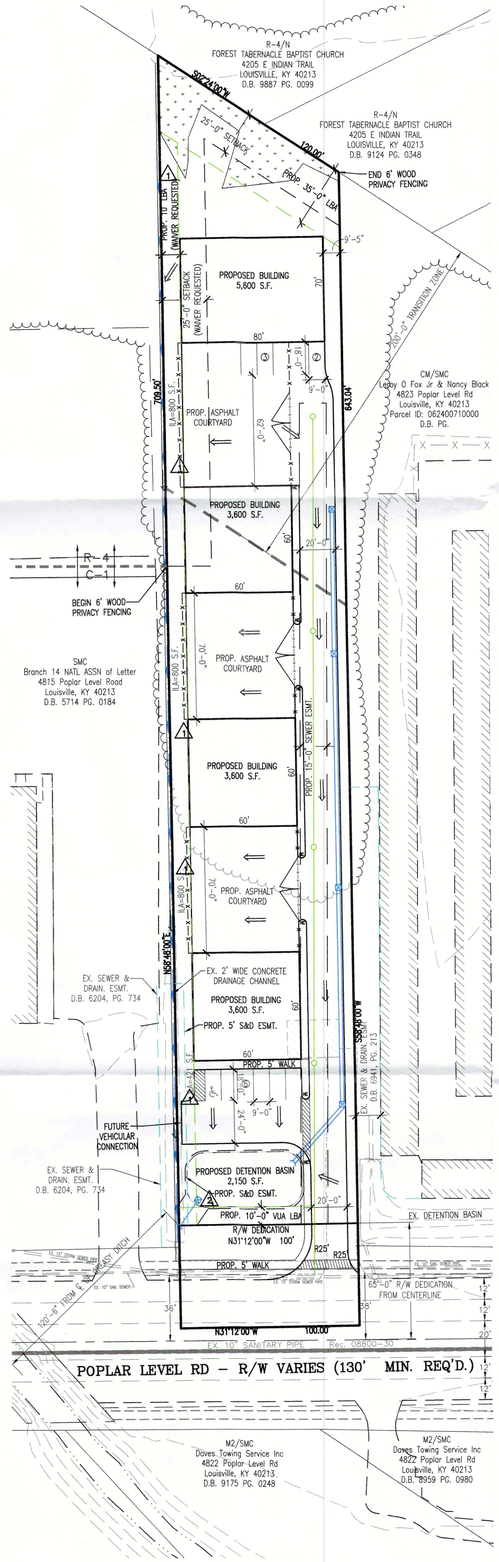

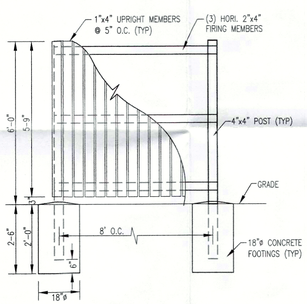

TYPICAL PRIVACY FENCE DETAIL
NO SCALE

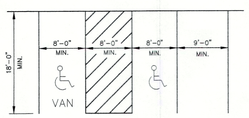

24' MINIMUM WIDTH OF AISLEWAY

TYPICAL PARKING SPACE LAYOUT
NO SCALE

MSD STANDARD EROSION CONTROLS	
1	STONE BAG CHECK DAM IN CONCRETE FLUMES
2	INLET PROTECTION
— SF —	SILT FENCE

LEGEND

- = NON-JURISDICTIONAL ISOLATED WOODED WETLAND
- = PROPOSED STORM SEWER, CATCH BASIN
- = PROPOSED SEWER AND MANHOLE
- = PROPOSED DRAINAGE SWALE

WAIVER REQUEST

A waiver is requested from Land Development Code Section 10.2.4.A to waive the requirement of a 35' ~~Transition Zone~~ Landscape Buffer Area along the northwestern property adjacent to the National Letter Carriers Association property.

VARIANCE REQUEST

A variance is requested from Land Development Code Section 5.3.2.C.2.b. to waive the requirement of a 25' ~~Transition Zone~~ Setback along the northwestern property adjacent to the National Letter Carriers Association property.

CONDITIONAL USE PERMIT REQUEST

A Conditional Use Permit is requested from Land Development Code Section 4.2.51 Storage Yard and Contractor's Yard, to allow outdoor storage areas on site.

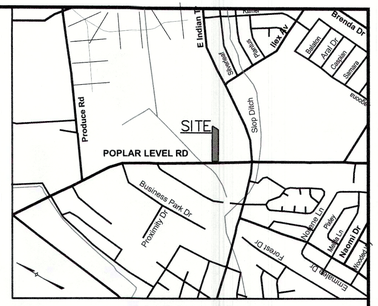

LOCATION MAP
NOT TO SCALE

DETENTION BASIN CALCULATIONS

X = Δ CRA
ΔC = 0.75-0.23=0.52
A = 1.41 ACRES
R = INCHES
X = (C)(A)(R)/12 = (.52)(1.41)(2.8/12)=0.17 AC.-FT.
REQUIRED X = 7,400 CU.FT.
PROVIDED BASIN = 2,150 SQ.FT.
TOTAL = 2,150 SQ.FT. @ APPROX. 3.5 FT. DEPTH
= 7,525 CU.FT. > 7,400 CU.FT.

TREE CANOPY CALCULATIONS

TOTAL SITE AREA	= 61,337 S.F.
TOTAL TREE CANOPY REQUIRED	= 20% (12,267 S.F.)
EXISTING TREE CANOPY TO BE PRESERVED	= 0 S.F.
PROPOSED TREE CANOPY TO BE PLANTED	= 12,960 S.F. (20%)

PROJECT DATA

TOTAL SITE AREA	= 1.41± Ac. (61,400 S.F.)	
R/W DEDICATION AREA	= 0.06 Ac. (2,765 S.F.)	
NET SITE AREA	= 1.41± Ac. (61,337 S.F.)	
FORM DISTRICT	= SUBURBAN MARKETPLACE CORRIDOR	
EXISTING ZONING	= R-4	
PROPOSED ZONING	= CM (CONDITIONAL USE PERMIT)	
EXISTING USE	= SINGLE FAMILY RESIDENTIAL	
PROPOSED USE	= CONTRACTOR BUSINESS PARK	
DENSITY	= (NO MAXIMUM PER ZONING)	
F.A.R.	= (5.0 MAXIMUM PER ZONING)	
BUILDING AREA		
BUILDING 1	= 3,600 S.F.	
BUILDING 2	= 3,600 S.F.	
BUILDING 3	= 3,600 S.F.	
BUILDING 4	= 5,600 S.F.	
TOTAL BUILDING AREA	= 16,400 S.F.	
PROPOSED BUILDING HEIGHT	= 1 STORY (60' MAX. ALLOWED)	
PARKING REQUIRED	MIN.	MAX.
OFFICE		
800S.F./350S.F. MIN; 800S.F./200S.F.	= 2 SPACES	4 SPACES
WAREHOUSE		
1SPACE/1.5 EMPLOYEE;1SPACE/1 EMP.	= 5 SPACES	8 SPACES
TOTAL PARKING REQUIRED	= 7 SPACES	12 SPACES
TOTAL PARKING PROVIDED	= 11 SPACES (2 ACCESSIBLE SPACE INCLUDED)	

BICYCLE PARKING
SHORT TERM–OFFICE BELOW 10,000 S.F. & WAREHOUSE – NONE REQUIRED*
*PER LDC TABLE 9.2.1
LONG TERM – SHALL BE PROVIDED INDOORS.

TOTAL VEHICULAR USE AREA	= 26,260 S.F.
LOADING AND UNLOADING AREA	= 12,603 S.F.
VEHICULAR USE AREA	= 13,657 S.F.
INTERIOR LANDSCAPE AREA REQUIRED	= 1,024 S.F. (7.5% OF VUA)
INTERIOR LANDSCAPE AREA PROVIDED	= 2,821 S.F. (21% OF VUA)

EROSION PREVENTION AND SEDIMENT CONTROL NOTES

1. The approved erosion prevention and sediment control (EPSC) plan shall be implemented prior to any land-disturbing activity on the construction site.
2. Any modifications to the approval EPSC plan must be reviewed and approved by MSD's private development review office. EPSC BMP's shall be installed per the plan and MSD standards.
3. Detention basins, if applicable, shall be constructed first and shall perform as sediment basins during construction until the contributing drainage areas are seeded and stabilized.
4. Actions must be taken to minimize the tracking of mud and soil from construction areas onto public roadways. Soil tracked onto the roadway shall be removed daily.
5. Soil stockpiles shall be located away from streams, ponds, swales and catch basins. Stockpiles shall be seeded, mulched, and adequately contained through the use of silt fence.
6. All stream crossings must utilize low-water crossing structures per MSD standard drawing ER-02.
7. Where construction or land disturbance activity will or has temporarily ceased on any portion of a site, temporary site stabilizaton measures shall be required as soon as practicable, but no later than 14 calender days after the activity has ceased.
8. Sediment-laden groundwater encountered during trenching, boring or other excavation activities shall be pumped to a sediment trapping device prior to being discharge into a stream, pond, swale or catch basin. All storm drainage shall conform to MSD standard specifications.
9. Construction fencing shall be erected prior to any construction or grading activities preventing compaction of root systems of trees to be preserved. The fencing shall enclose the area beneath the dripline of the tree canopy and shall remain in place. No parking, material storage, or construction activities shall be permitted within the fenced area.

GENERAL NOTES:

1. Parking areas and drive lanes to be a hard and durable surface.
2. An encroachment permit and bond will be required for all work done in the right-of-way.
3. State Highway encroachment permit will be required for the entrance.
4. No increase in drainage run off to state roadways.
5. There shall be no commercial signs in the Right of Way.
6. There shall be no landscaping in the Right of Way without an encroachment permit.
7. Site lighting shall not shine in the eyes of drivers. If it does it shall be re-aimed, shielded, or turned off.
8. Construction fencing shall be erected prior to any construction or grading activities preventing compaction of root systems of trees to be preserved. The fencing shall enclose the area beneath the drip line of the tree canopy and shall remain in place. No parking, material storage, or construction activities shall be permitted within the fenced area.
9. Mitigation measures for dust control shall be in place during construction to prevent fugitive particulate emissions from reaching existing roads and neighboring properties.
10. KTC permit will be required prior to construction plan approval.
11. Upon development or redevelopment of adjacent properties, a unified access and circulation system shall be developed to eliminate pre-existing curb cuts and provide for vehicular movement throughout adjacent sites as determined appropriate by the Department of Public Works. A cross access agreement to run with the land and in a form acceptable to the Planning Commission legal counsel shall be recorded prior to the time of construction approval for the adjacent property to be developed.
12. Right-of-way dedication by deed or minor plat must be recorded prior to construction approval by Transportation Planning.
13. Off-Street loading and refuse collection areas shall be located and screened so as not to be visible from adjacent public streets and residential areas.
14. Compatible utilities shall be placed in a common trench unless otherwise required by appropriate agencies.

MSD NOTES:

1. Sanitary sewer service will be provided by lateral extension and subject to applicable fees.
2. No portion of the site is within the 100 year flood plain per FIRM Map No. 21111 C 0077 E dated December 5, 2006.
3. Drainage pattern depicted by arrows (⟹) is for conceptual purposes. Final configuration and size of drainage pipes and channels shall be determined during the construction plan design process. Drainage facilities shall conform to MSD requirements.
4. Site will be subject to MSD Regional Facilities Fee x 1.5.
5. If the site has thru drainage an easement plat will be required prior to MSD granting construction plan approval.
6. A Downstream Facilities Capacity Request has been submitted to MSD.
7. The final design of this project must meet all MS4 water quality regulations established by MSD. Site layout may change at the design phase due to proper sizing of Green Best Management Practices.
8. Erosion & Silt Control shown is conceptual only, and final design will be determined on construction plans.
9. Prior to any construction activities on the site a Erosion & Silt Control Plan shall be provided to MSD for approval.
10. Army Corp of Engineers jurisdictional wetland determination required prior to MSD construction plan approval.
11. On-site detention will be provided. Post-development peak flows will be limited to pre-development peak flows for the 2, 10, 25, and 100-year storms or to the capacity of the downstream system, whichever is more restrictive.
12. KyTC approval required prior to MSD construction plan approval.
13. MSD drainage bond required prior to construction plan approval.

GRAPHIC SCALE
40 0 20 40 80 160
(IN FEET)
1 inch = 40 ft.

SITE ADDRESS:
4819 POPLAR LEVEL ROAD
LOUISVILLE, KY 40213
D.B. 10555, PG. 0482
TAX BLOCK 0624, LOT 0062

COUNCIL DISTRICT – 10
FIRE PROTECTION DISTRICT – OKOLONA

CASE:17ZONE1000
RELATED CASE: NONE
WM# 11580

NO.	DATE	DESCRIPTION	BY

REVISIONS

SURVEYOR'S SEAL

ENGINEER'S SEAL

PROJECT DATA
FILE NAME: 16143_Concept.dwg
DATE: 4-3-17
SCALE: AS SHOWN
CHECKED BY: KMY
DRAWN BY: JA/SBS

LD&D
LAND DESIGN & DEVELOPMENT, INC.
ENGINEERING · LAND SURVEYING · LANDSCAPE ARCHITECTURE
503 WASHBURN AVENUE, SUITE 101 · LOUISVILLE, KENTUCKY 40222
PHONE: (502) 893-0220 · FAX: (502) 893-0274
WEB SITE: WWW.LDD-INC.COM

DETAILED DISTRICT DEVELOPMENT PLAN & CUP

MARRILLA
4819 POPLAR LEVEL ROAD
OWNER/DEVELOPER
M&C RENTALS, LLC.
12313 TAYLORSVILLE ROAD
LOUISVILLE, KY 40299
502.267.2042

RECEIVED
APR 04 2017
PLANNING & DESIGN SERVICES

JOB NO. 16143

SHEET 1 OF 1

17 ZONE 1000

P:\16143\DWG\Planning\16143_DDDP Filed 4-4-17.dwg, 4/3/2017 3:18:10 PM, 1:1