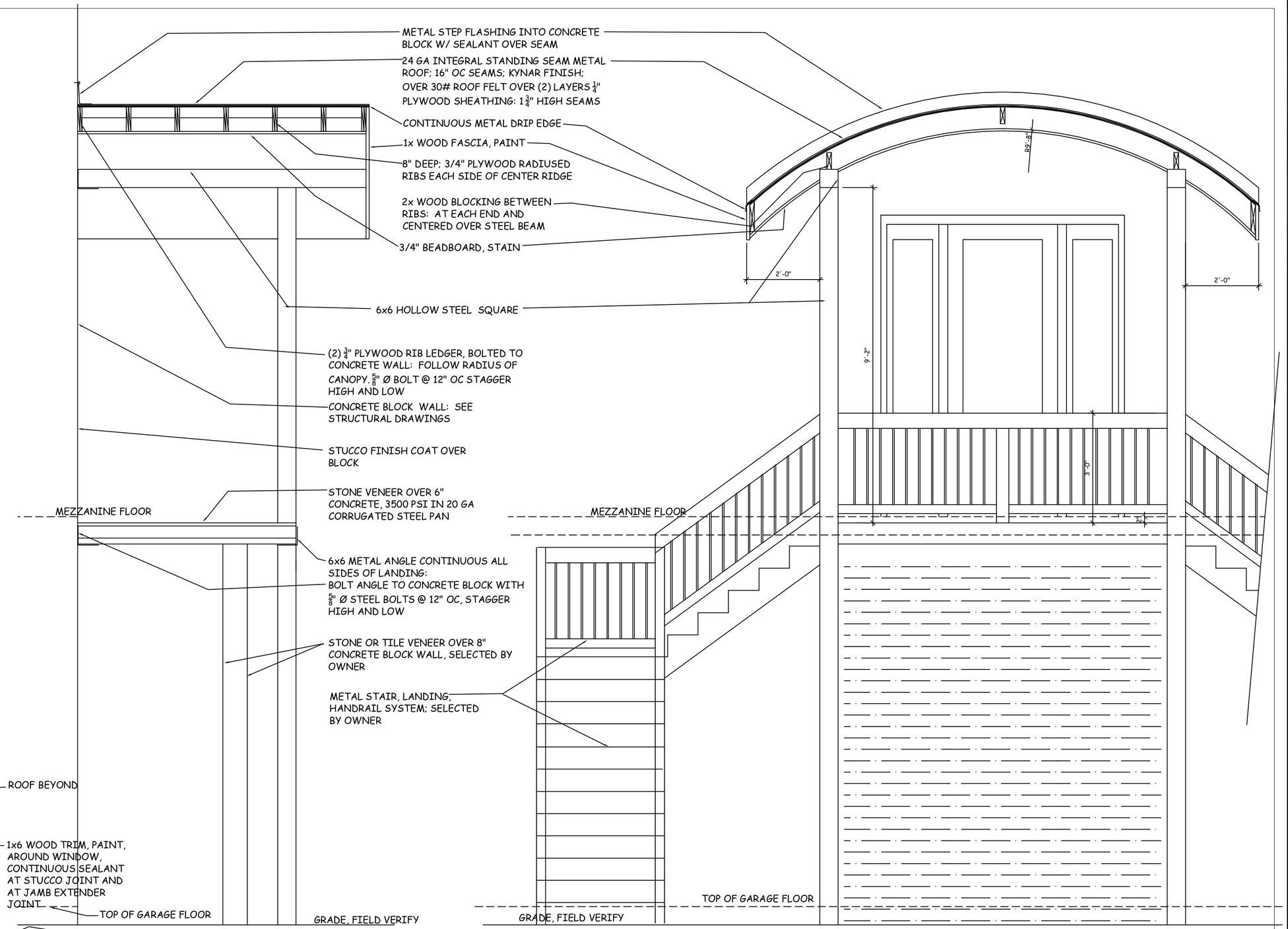

CANOPY AND LANDING SECTION
1/2"=1'-0"

PART FRONT ELEVATION AT ENTRY STAIRS - CANOPY SECTION
1/2"=1'-0"

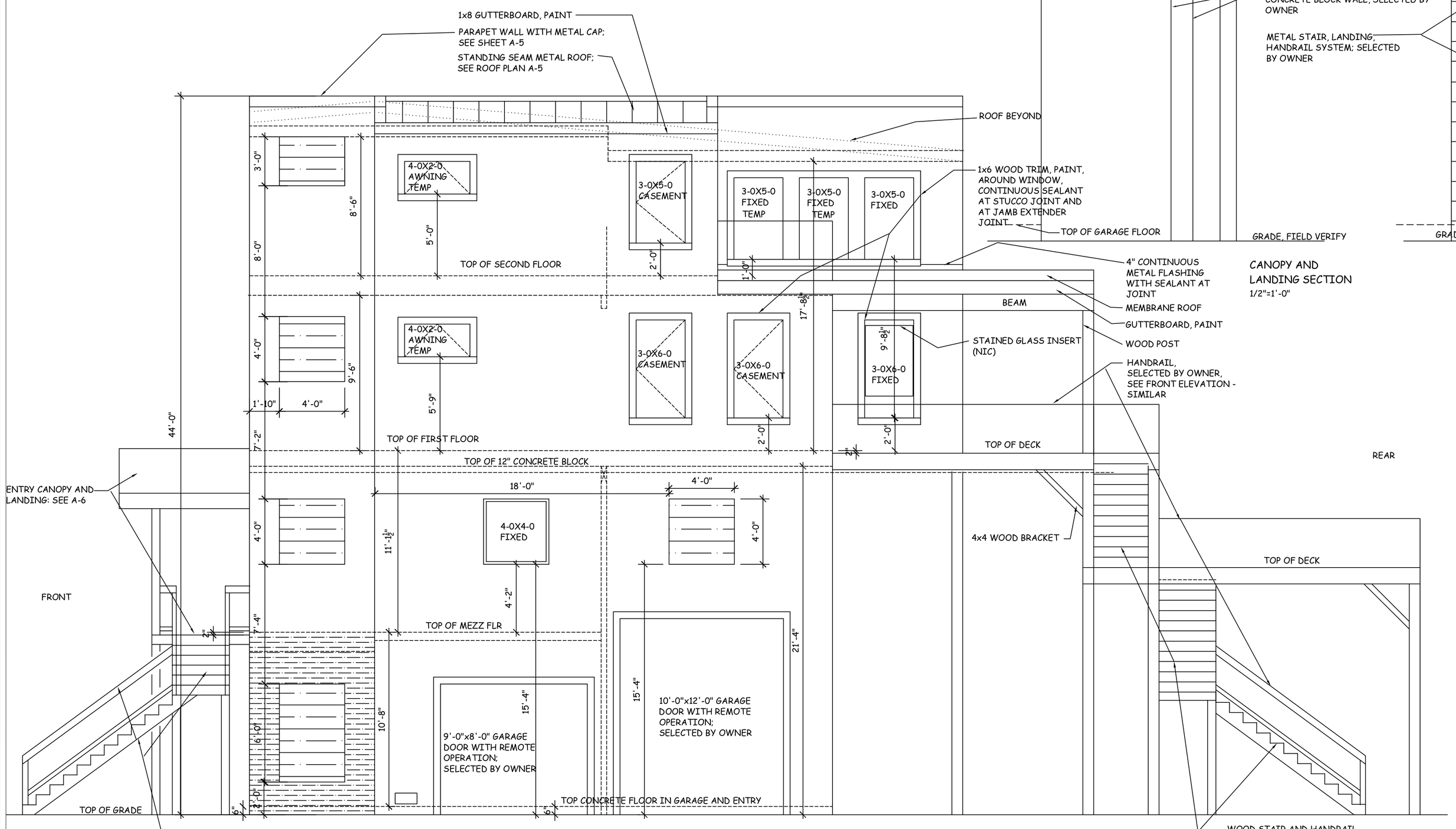

SIDE ELEVATION
¼"=1'-0"

Revisions:

1	
2	
3	
4	
5	
6	
7	
8	
9	

Anne Del Prince, Architect
640 Country Club Road
(502) 893-6026

Brown Residence
5455 Juniper Beach
Prospect, KY 40059

Title: Elevations

Date: 5/18/20

Scale: as noted

Sheet No.: A-6

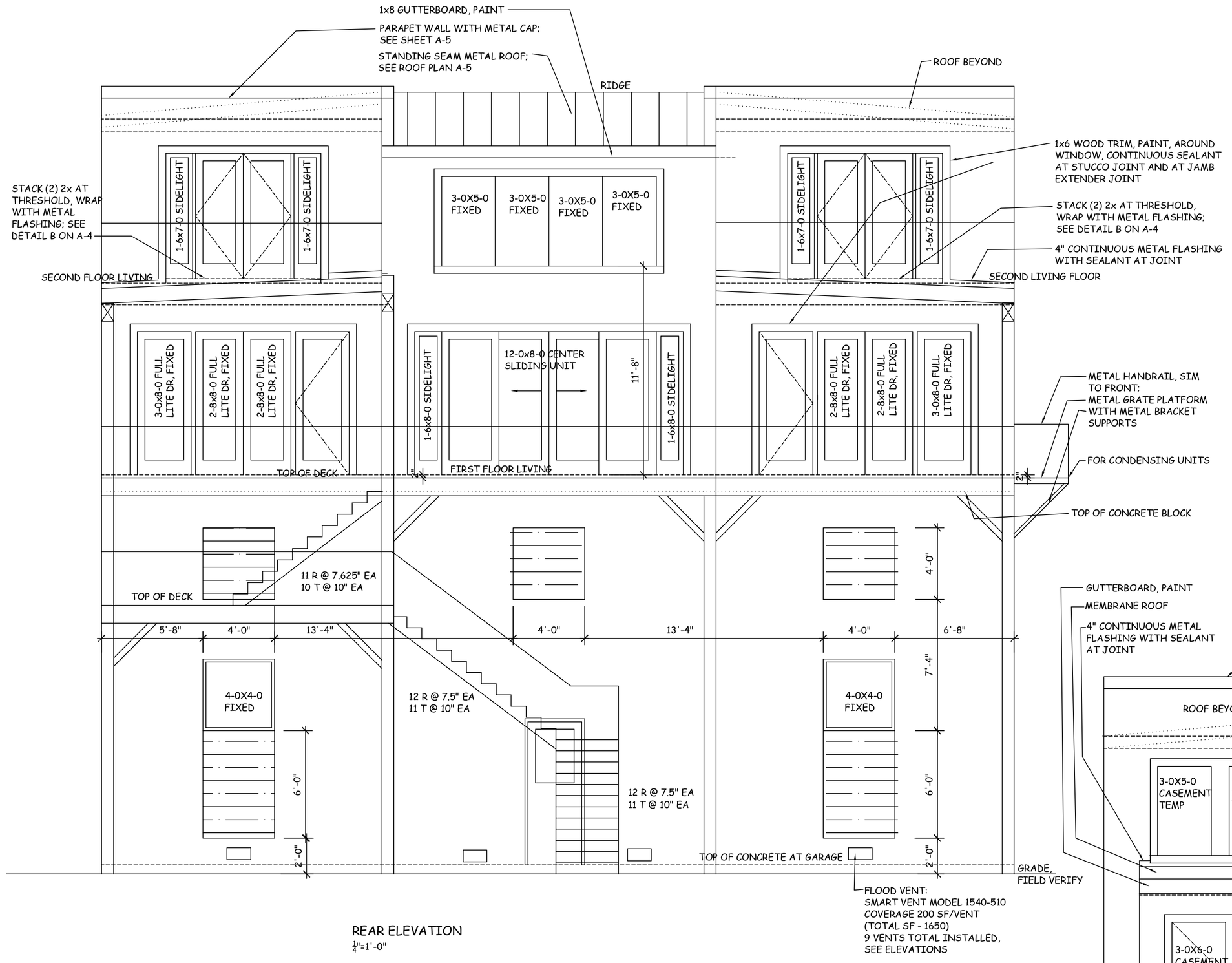

REAR ELEVATION
$\frac{1}{4}$"=1'-0"

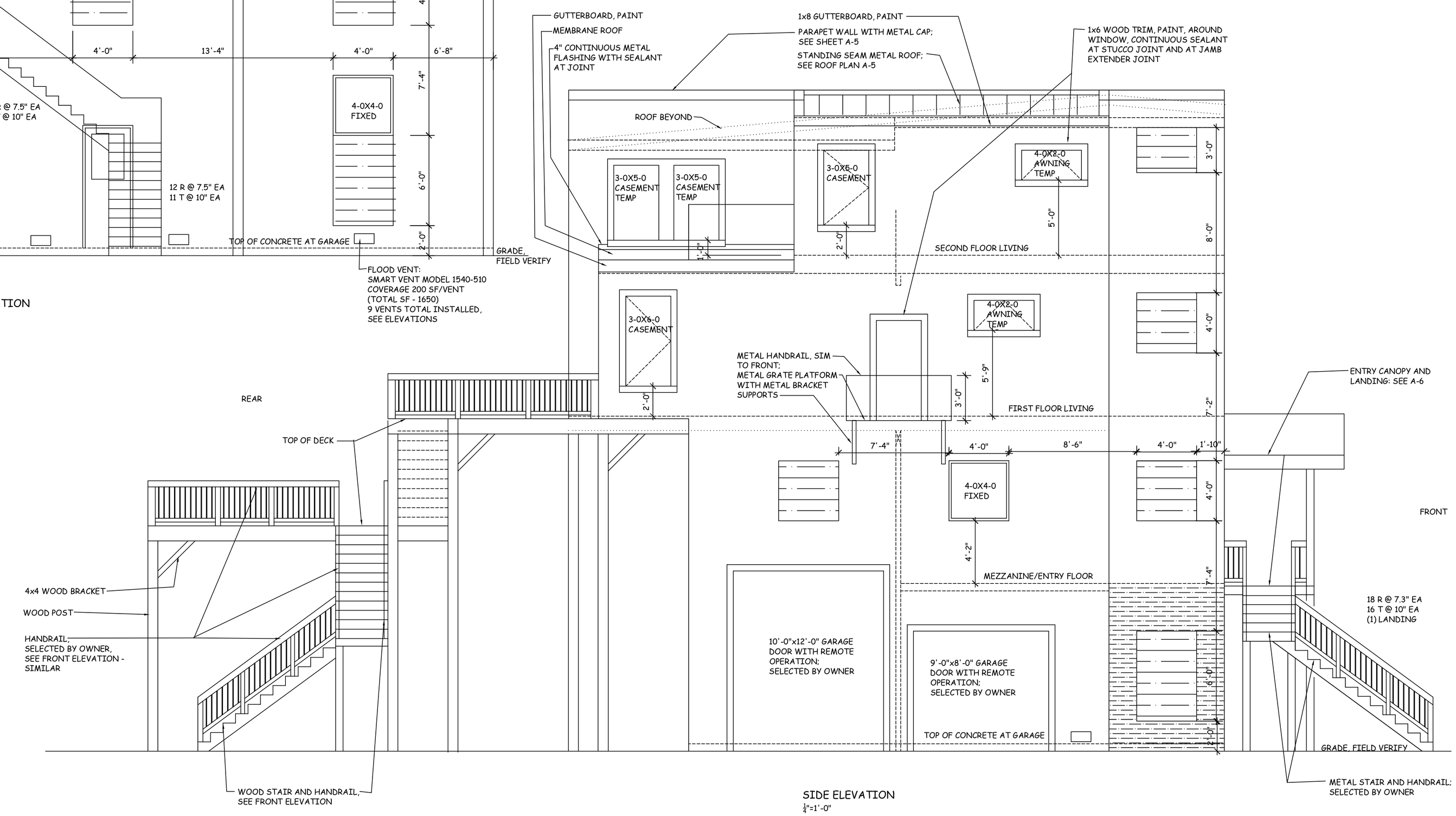

SIDE ELEVATION
$\frac{1}{4}$"=1'-0"

Revisions:

1	
2	
3	
4	
5	
6	
7	
8	
9	

Anne Del Prince, Architect
640 Country Club Road
(502) 893-6026

Brown Residence
5455 Juniper Beach
Prospect, KY 40059

Title: Elevations

Date: 5/18/20

Scale: 1/4"=1'-0"

Sheet No.: A-7

WINDOW FLASHING:
POSITIVE DRAINAGE: INSTALL SILL FLASHING FIRST; THEN INSTALL WINDOW WITH A BEAD OF SEALANT TO BACKSIDE OF NAILING FLANGE; THEN INSTALL EACH JAMB FLASHING TO OVERLAP SILL FLASHING; LIFT UP HOUSEWRAP THEN INSTALL HEAD FLASHING TO OVERLAP EACH JAMB FLASHING. DRAPE TYVEK HOUSEWRAP OVER HEAD FLASHING, TAPE CUTS

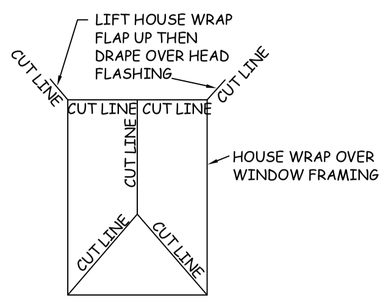

WINDOW NOTE:
SIZES ARE ROUGH OPENING, AND VARY WITH MFGR'S STANDARD SIZES.
SUGGEST MARVIN FOR WOOD CLAD WINDOWS OR WEATHERSHIELD FOR VINYL WINDOWS OR APPROVED EQUAL
MULLION PATTERN ON CASEMENT WINDOWS AT REAR ELEVATION TO MIMIC DOUBLE HUNG WINDOW
ALUM CLAD EXTERIOR WOOD WINDOW: PAINT INTERIOR WOOD
INSULATED GLASS W/ LOW-E COATING
FULL BLACK INSECT SCREEN ON OPERABLE WINDOWS
STANDARD HARDWARE
BOTTOM SASH TEMPERED GLASS WHEN LESS THAN 20" ABOVE FLOOR
MOUNT WITH NAILING FINS TO OUTSIDE FACE OF SHEATHING/HOUSEWRAP AS TEMP SUPPORT, MAKE WINDOW PLUMB AND LEVEL WITH WOOD SHIMS ALL SIDES,
INSTALL CONTINUOUS SEALANT AT WINDOW PERIMETER INSIDE AND OUTSIDE

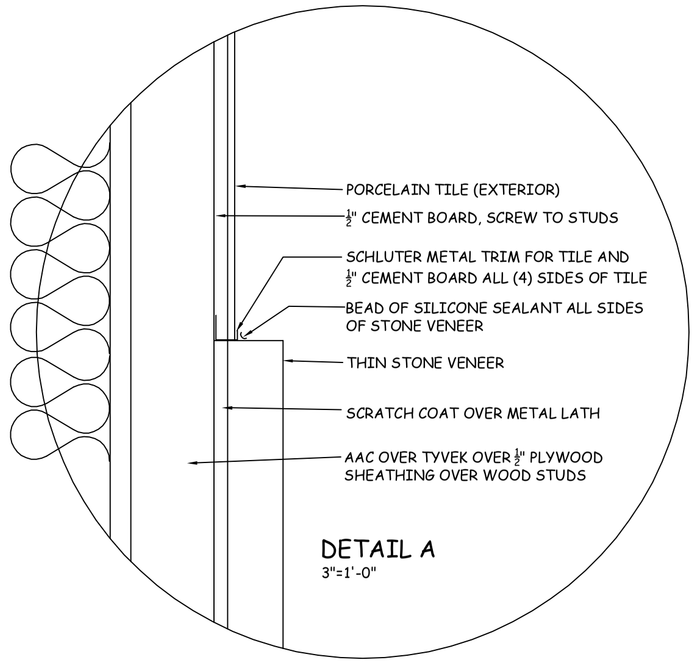

NOTE:
AT FAKE STONE VENEER: USE COURSE HEAD WOOD SCREWS TO ATTACH LATH TO AAC

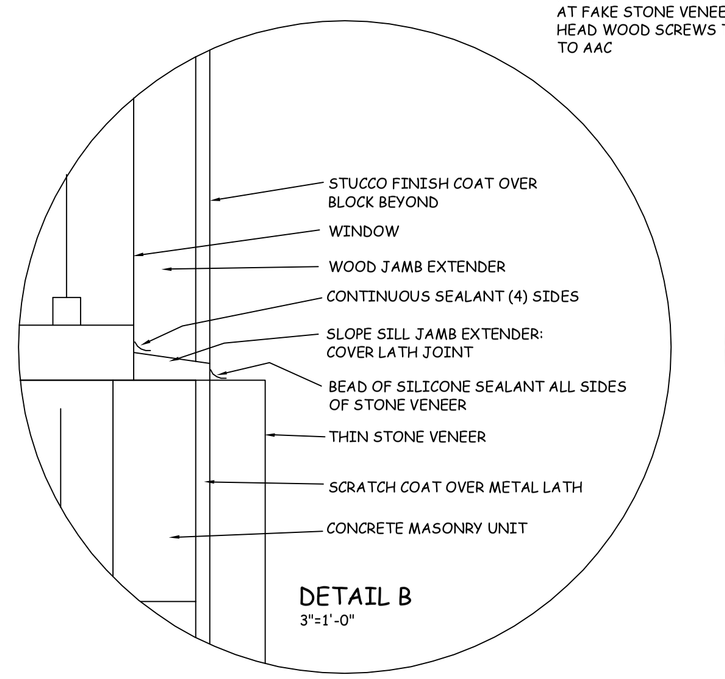

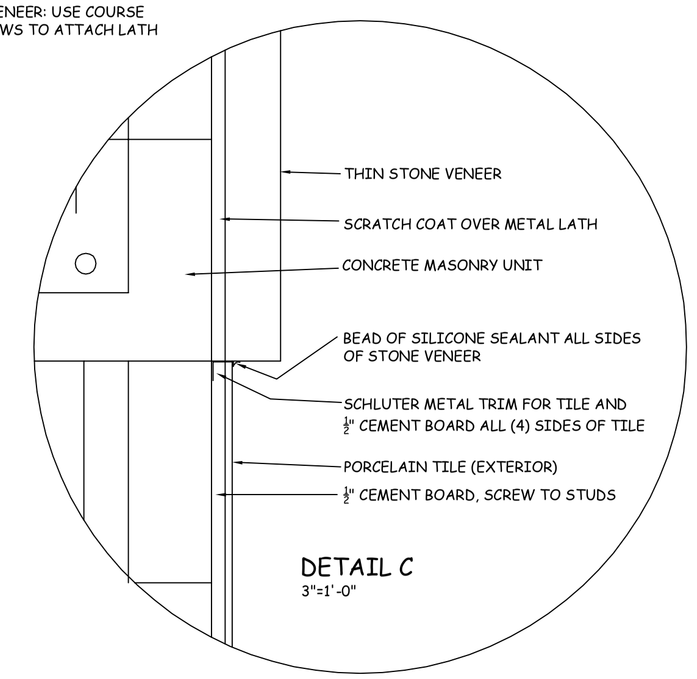

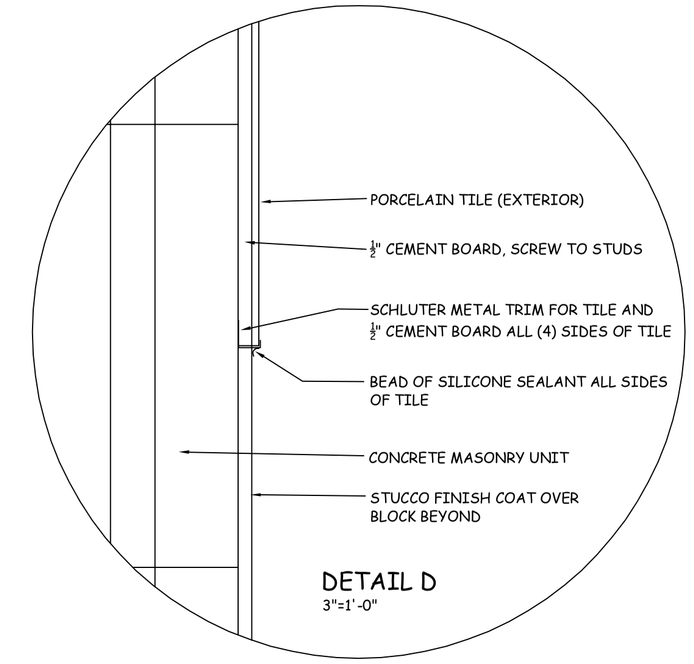

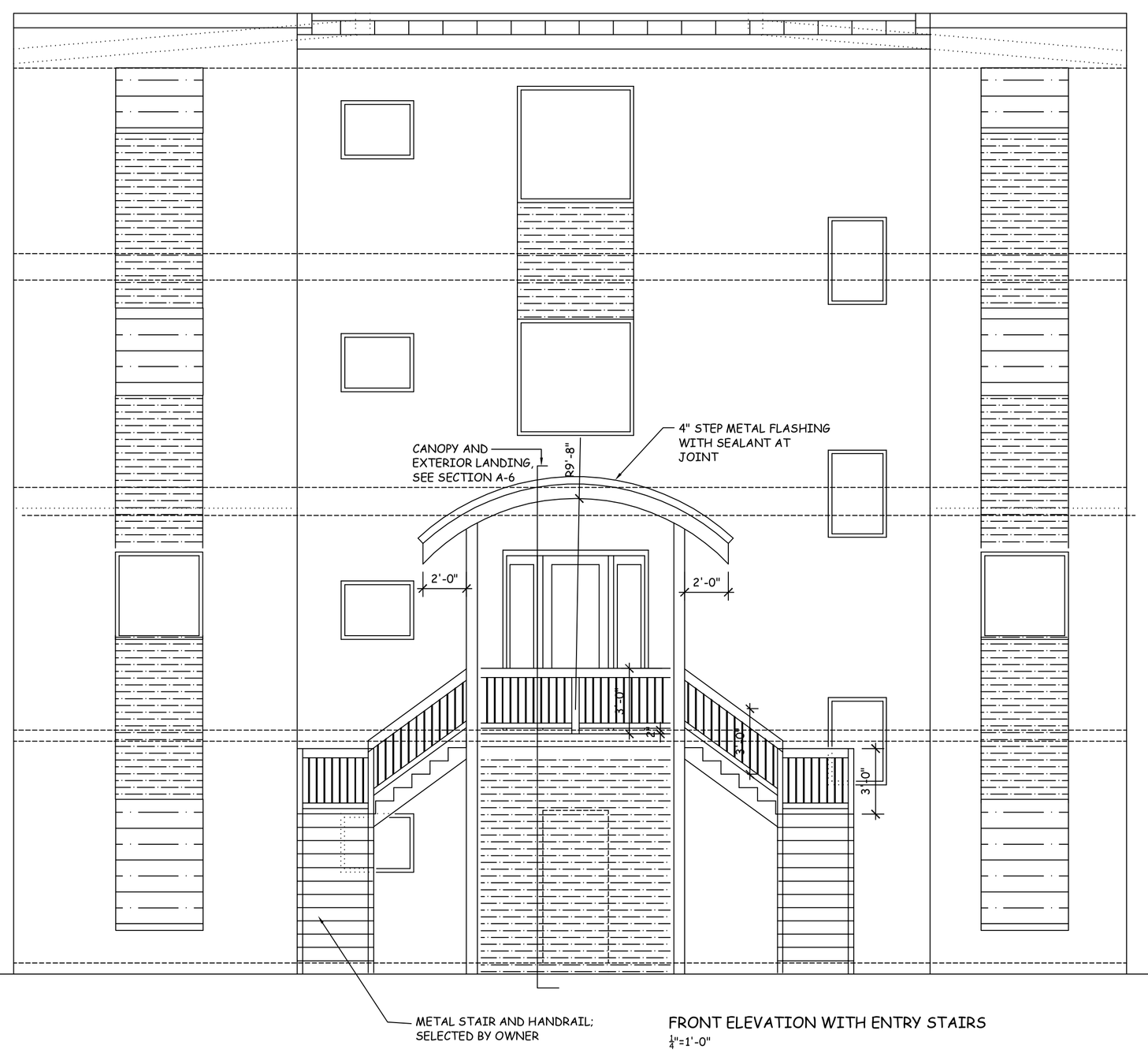

FRONT ELEVATION WITH ENTRY STAIRS
¼"=1'-0"

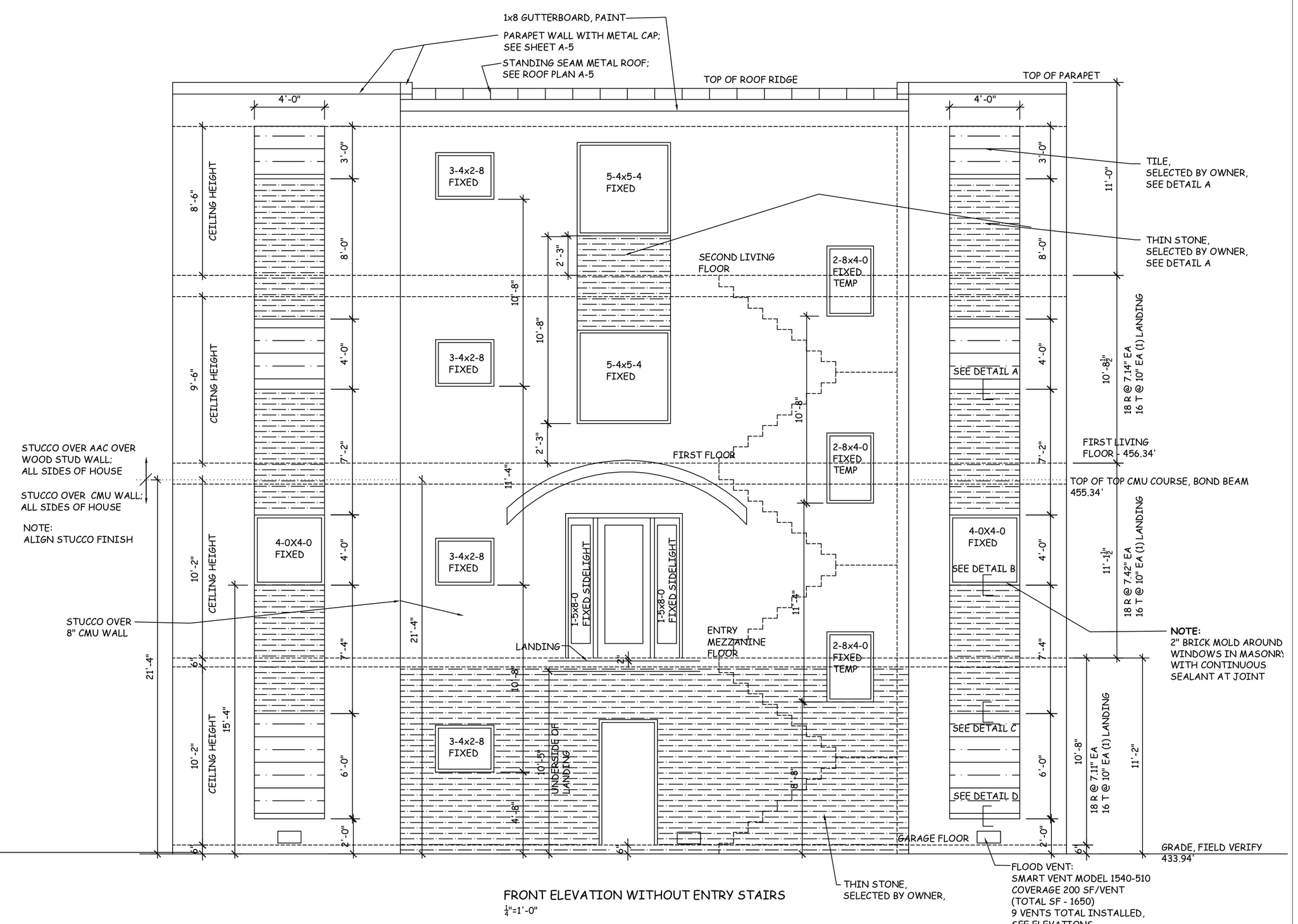

FRONT ELEVATION WITHOUT ENTRY STAIRS
¼"=1'-0"

Revisions:

1		
2		
3		
4		
5		
6		
7		
8		
9		

Anne Del Prince, Architect
640 Country Club Road
(502) 893-6026

Brown Residence
5455 Juniper Beach
Prospect, KY 40059

Title: Elevations Details

Date: 5/18/20

Scale: as noted

Sheet No.: A-8