Use of these plans by the client/customer of Better By Design, LLC indicates that the client/customer understands and agrees to all of, but not limited to, the following terms and conditions of such use.

Better By Design, LLC its members, employees and/or agents, actual or apparent, assume no liability for design errors or omissions beyond the amount paid to Better By Design, LLC by the client/customer for the plans produced.

Better By Design, LLC members, employees and/or agents, actual or apparent, shall not be liable to the client/customer for any costs, losses, injuries or damages caused to the client/customer by any departure from the plans.

Client/customer agrees to indemnify Better By Design, LLC for any claims by any third parties for any costs, losses, injuries or damages caused by any departure from the plans. This provisions covers departures from the plans by the client/customer, and also departures from the plans by any individual or entity with whom the client/customer enters these plans.

The client/customer acknowledges that the plans were prepared assuming that certain materials would be available, and the client/customer acknowledges that those materials may or may not be available at the time of construction. Better By Design, LLC shall not be liable to the client/customer for any costs, losses, injuries or damages caused to the client/customer by any departure from the materials contemplated when the plans were prepared.

Client/customer agrees to indemnify Better By Design, LLC for any claims by any third parties for any costs, losses, injuries or damages caused by any departure from the materials contemplated when the plans were prepared. This provision covers departures from materials by the client/customer, and also departures from materials by any individual or entity with whom the client/customer enters these plans.

The client/customer acknowledges that design errors are possible and the client/customer agrees to employ a licensed, insured, professional engineer/architect/contractor and/or sub-contractors to insure structural integrity and compliance with federal, state and local laws, rules, codes and regulations.

Better By Design, LLC shall not be liable to the client/customer for any costs, losses, injuries or damages caused by design errors. Client/customer agrees to pursue his licensed, insured, professional engineer/architect/contractor and/or sub-contractors and/or Better By Design, LLC remedies in the event of design errors, and client/customer agrees to indemnify Better By Design, LLC for any claims by any third parties for any costs, losses, injuries or damages caused by design errors.

Client/customer agrees that scales given over drawings and dimensions given over scale.

Elevation drawings are conceptual only. Better By Design, LLC expresses no guarantee and assumes no liability for any differences between the drawings and the actual appearance of the structure when constructed.

Customer/client should verify topographic and subsurface conditions and adapt foundation plans accordingly.

Bidders should verify materials, requirements, and availability and report any discrepancies to the customer/client.

The purchase of prints from Better By Design, LLC or their agents constitutes a client/customer status and grants a license to the client/customer to build one structure conceptualized by the plan. Changes and modifications to the original drawings (if the changes are not needed to be known on the drawing) are permitted. However, full rights and title to the original plan and any derivative work of same is retained by Better By Design, LLC.

No plans produced by Better By Design, LLC may be reproduced by the client/customer, his agents or assigns, in any form without the express written consent of Better By Design, LLC. And in any event, Better By Design, LLC retains all rights, title and interest in the original drawings and all copies. Copying or distributing the property of Better By Design, LLC in any form (hard copies, electronic media, etc.) is strictly prohibited. Violators may be subject to criminal or civil liability.

All parties acknowledge and agree that terms and conditions herein shall be construed according to the laws of Indiana.

BUILDER SHALL VERIFY ALL DIMENSIONS BEFORE CONSTRUCTION

NOTE: ALL DIMENSIONS ARE BASED UPON AND DERIVED FROM FIELD MEASUREMENTS. WALL FINISHES, ACCESSABLILITY, MECHANICAL AND HUMAN ERROR MAY MAKE SOME FIELD ADJUSTMENTS NECESSARY.

IMPORTATNT NOTE:
ALL POSSIBLE CARE HAS BEEN TAKEN TO ASSURE THE ACCURACY OF DIMENSIONS, ROOF PITCH AND THE EXPECTED APPEARANCE OF THE FINISHED HOME FOR THIS REMODEL / ADDITION PLAN. ALL IS BASED UPON FIELD MEASURMENT OR THE ORIGINAL CONSTRUCTION PLANS OF THE EXISTING STRUCTURE. UNKNOWNS EXIST IN EVERY STRUCTURE THAT MAY BE REVEALED ONLY UPON DEMOLITION AND CONSTRUCTION AS WORK PROGRESSES. THEREFORE, THE BUILDER MAY HAVE TO MAKE FIELD ADJUSTMENTS BASED UPON ACTUAL DIMENSIONS AND CONDITIONS. BETTER BY DESIGN LLC NOR ITS OPERATIVES ACCEPT ANY RESPONSIBILITY FOR VARIATIONS OF DIMENSIONS, ROOF PITCH OR APPEARANCE OF THE FINISHED HOME.

BUILDER MUST DETERMINE THE FEASIBILITY OF REMOVING WALLS OR OTHER STRUCTURE. IF ROOF OR FLOOR BEARING WALLS OR BEAMS ARE TO BE ALTERED OR REMOVED, CARE MUST BE TAKEN TO SUPPORT EXISTING STRUCTURE BEFORE ALTERING OR REMOVING EXISTING SUPPORT. IT IS THE RESPONSIBILITY OF THE BUILDER AND OWNER TO ASSURE SAFETY AND STRUCTURAL INTEGRITY. BETTER BY DESIGN LLC PLANS ARE CONCEPTUAL AND AS SUCH DO NOT EXPRESS OR IMPLY THAT ALTERATION OR REMOVAL OF ANY EXISTING STRUCTURE IS SOUND PRACTICE FROM AN ARCHITECTURAL OR ENGINEERING PERSPECTIVE. BETTER BY DESIGN LLC ASSUMES NO RESPONSIBILITY FOR JOB SITE SAFETY OR FOR ANY INJURY OR DAMAGE RESULTING FROM THE BUILDERS ATTEMPT TO DEMOLISH, ALTER OR CONSTRUCT ANY STRUCTURE DEPICTED ON THIS PLAN.

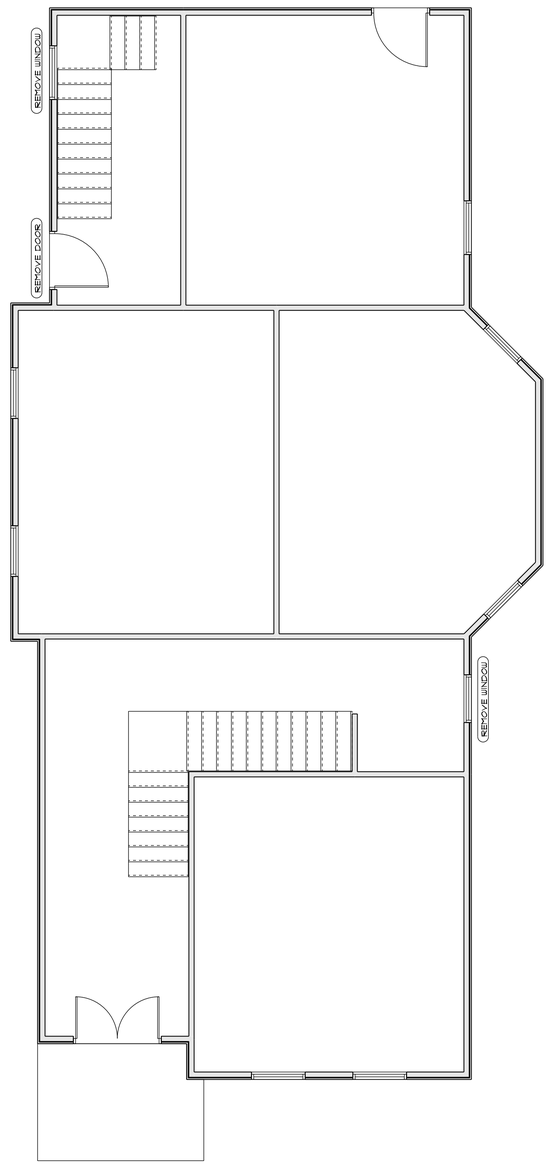

EXISTING MAIN FLOOR

SCALE: 1/4" = 1'-0"

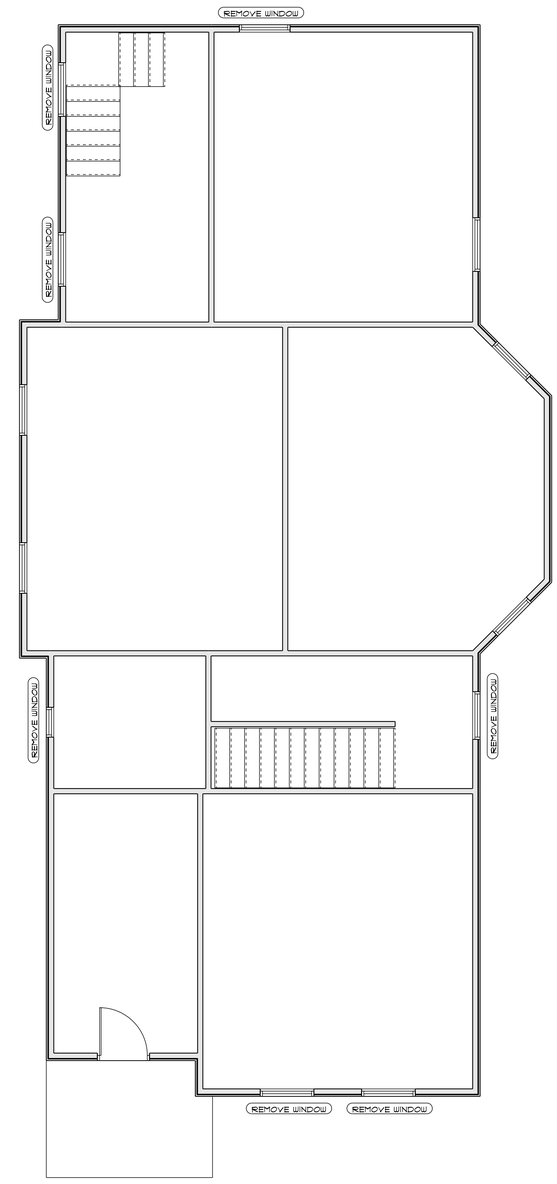

EXISTING UPPER FLOOR

SCALE: 1/4" = 1'-0"

BETTER by DESIGN LLC

H3 PROPERTIES

DESIGN: • 2824 MONTGOMERY ST.
REVISED: 6/17/2022
DESIGNER: JWC
BETTER BY DESIGN
NEW ALBANY, IN
(502)741-2148
WWW.BBD-PLANS.COM
email- SALES@BBD-PLANS.COM

09:36 AM 6/17/2022 2020.2.9

Use of these plans by the client/customer of Better By Design, LLC indicates that the client/customer understands and agrees to all of, but not limited to, the following terms and conditions of such use.

Better By Design, LLC its owners, employees and/or agents, actual or apparent, assume no liability for design errors or omissions beyond the amount paid to Better By Design, LLC by the client/customer for the plans produced.

Better By Design, LLC owners, employees and/or agents, actual or apparent, shall not be liable to the client/customer for any costs, losses, injuries or damages caused to the client/customer by any departure from the plans.

Client/customer agrees to indemnify Better By Design, LLC for any claims by any third parties for any costs, losses, injuries or damages caused by any departure from the plans. This provisions covers departures from the plans by the client/customer, and also departures from the plans by any individual or entity with whom the client/customer enters these plans.

The client/customer acknowledges that the plans were prepared assuming that certain materials would be available, and the client/customer acknowledges that those materials may or may not be available at the time of construction. Better By Design, LLC shall not be liable to the client/customer for any costs, losses, injuries or damages caused to the client/customer by any departure from the materials contemplated when the plans were prepared.

Client/customer agrees to indemnify Better By Design, LLC for any claims by any third parties for any costs, losses, injuries or damages caused by any departure from the materials contemplated when the plans were prepared. This provision covers departures from materials by the client/customer, and also departures from materials by any individual or entity with whom the client/customer enters these plans.

The client/customer acknowledges that design errors are possible and the client/customer agrees to employ a licensed, insured, professional engineer/architect/contractor and/or sub-contractors to insure structural integrity and compliance with federal, state and local laws, rules, codes and regulations.

Better By Design, LLC shall not be liable to the client/customer for any costs, losses, injuries or damages caused by design errors. Client/customer agrees to pursue his licensed, insured, professional engineer/architect/contractor and/or sub-contractors for any costs, losses, injuries or damages caused by design errors. And client/customer agrees to indemnify Better By Design, LLC for any claims by any third parties for any costs, losses, injuries or damages caused by design errors.

Client/customer agrees that scales given over drawings and dimensions given over scale.

Elevation drawings are conceptual only. Better By Design, LLC expresses no guarantee and assumes no liability for any differences between the drawings and the actual appearance of the structure when constructed.

Customer/client should verify topographic and subsurface conditions and adapt foundation plans accordingly.

Bidders should verify materials, requirements, and availability and report any discrepancies to the customer/client.

The purchase of prints from Better By Design, LLC or their agents constitutes a client/customer relationship and grants a license to the client/customer to build one structure conceptualized by the plan. Changes and modifications to the original drawings (if the changes are not needed to be known on the drawing) are permitted. However, full rights and title to the original plan and any derivative work of same is retained by Better By Design, LLC.

No plans produced by Better By Design, LLC may be reproduced by the client/customer, his agents or assigns, in any form without the express written consent of Better By Design, LLC. And in any event, Better By Design, LLC retains all rights, title and interest in the original drawings and all copies. Copying or distributing the property of Better By Design, LLC in any form (hard copies, electronic media, etc.) is strictly prohibited. Violations may be subject to criminal or civil liability.

All parties acknowledge and agree that terms and conditions herein shall be construed according to the laws of Indiana.

BUILDER SHALL VERIFY ALL DIMENSIONS BEFORE CONSTRUCTION

NOTE: ALL DIMENSIONS ARE BASED UPON AND DERIVED FROM FIELD MEASUREMENTS. WALL FINISHES, ACCESSABLILITY, MECHANICAL AND HUMAN ERROR MAY MAKE SOME FIELD ADJUSTMENTS NECESSARY.

IMPORTATNT NOTE:
ALL POSSIBLE CARE HAS BEEN TAKEN TO ASSURE THE ACCURACY OF DIMENSIONS, ROOF PITCH AND THE EXPECTED APPEARANCE OF THE FINISHED HOME FOR THIS REMODEL / ADDITION PLAN. ALL IS BASED UPON FIELD MEASURMENT OR THE ORIGINAL CONSTRUCTION PLANS OF THE EXISTING STRUCTURE. UNKNOWNS EXIST IN EVERY STRUCTURE THAT MAY BE REVEALED ONLY UPON DEMOLITION AND CONSTRUCTION AS WORK PROGRESSES. THEREFORE, THE BUILDER MAY HAVE TO MAKE FIELD ADJUSTMENTS BASED UPON ACTUAL DIMENSIONS AND CONDITIONS. BETTER BY DESIGN LLC NOR ITS OPERATIVES ACCEPT ANY RESPONSIBILITY FOR VARIATIONS OF DIMENSIONS, ROOF PITCH OR APPEARANCE OF THE FINISHED HOME.

BUILDER MUST DETERMINE THE FEASIBILITY OF REMOVING WALLS OR OTHER STRUCTURE. IF ROOF OR FLOOR BEARING WALLS OR BEAMS ARE TO BE ALTERED OR REMOVED, CARE MUST BE TAKEN TO SUPPORT EXISTING STRUCTURE BEFORE ALTERING OR REMOVING EXISTING SUPPORT. IT IS THE RESPONSIBILITY OF THE BUILDER AND OWNER TO ASSURE SAFETY AND STRUCTURAL INTEGRITY. BETTER BY DESIGN LLC PLANS ARE CONCEPTUAL AND AS SUCH DO NOT EXPRESS OR IMPLY THAT ALTERATION OR REMOVAL OF ANY EXISTING STRUCTURE IS SOUND PRACTICE FROM AN ARCHITECTURAL OR ENGINEERING PERSPECTIVE. BETTER BY DESIGN LLC ASSUMES NO RESPONSIBILITY FOR JOB SITE SAFETY OR FOR ANY INJURY OR DAMAGE RESULTING FROM THE BUILDERS ATTEMPT TO DEMOLISH, ALTER OR CONSTRUCT ANY STRUCTURE DEPICTED ON THIS PLAN.

FRONT ELEVATION
SCALE: 1/4" = 1'-0"

REAR ELEVATION
SCALE: 1/4" = 1'-0"

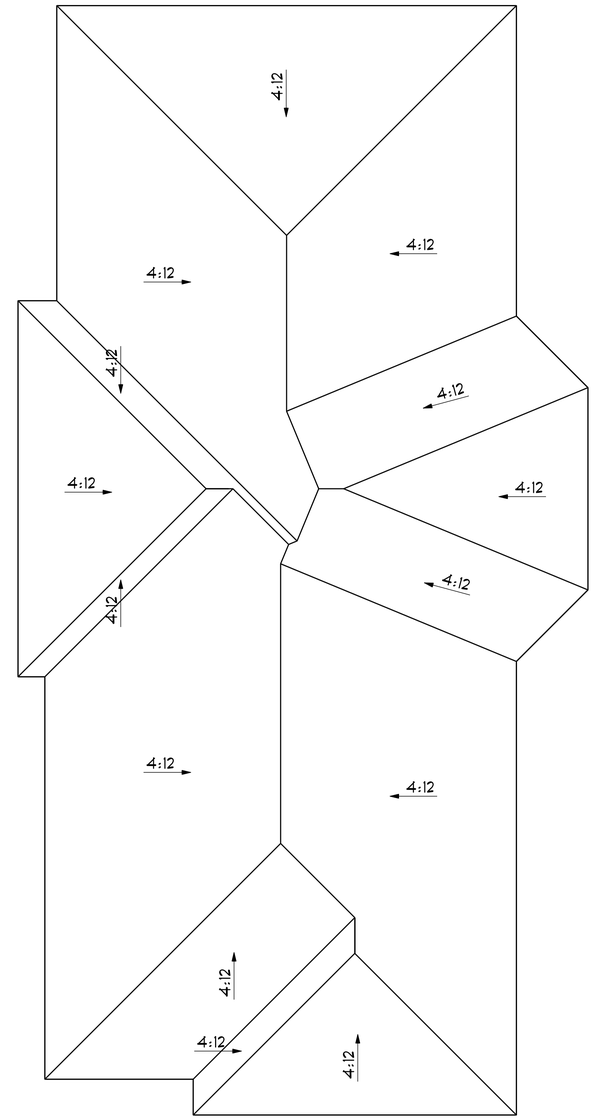

BIRDSEYE
SCALE: 1/4" = 1'-0"

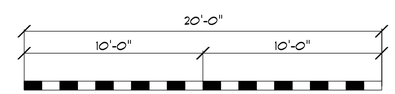

SCALE

THIS PAGE MAY BE PRINTED IN VARIOUS SIZES. TO DETERMINE SCALE ON THIS PAGE SIZE COMPARE RULER TO SCALE ABOVE. EACH BLOCK EQUALS 1 FOOT.

BETTER by DESIGN LLC

H3 PROPERTIES

DESIGN: • 2824 MONTGOMERY ST.
REVISED: 6/17/2022
DESIGNER: JWC
BETTER BY DESIGN
NEW ALBANY, IN
(502)741-2748
WWW.BBD-PLANS.COM
email- SALES@BBD-PLANS.COM

2020.2.9

6/17/2022

09:36 AM

Use of these plans by the client/customer of Better By Design, LLC indicates that the client/customer understands and agrees to all of, but not limited to, the following terms and conditions of such use.

Better By Design, LLC its members, employees and/or agents, actual or apparent, assume no liability for design errors or omissions beyond the amount paid to Better By Design, LLC by the client/customer for the plans produced.

Better By Design, LLC members, employees and/or agents, actual or apparent, shall not be liable to the client/customer for any costs, losses, injuries or damages caused to the client/customer by any departure from the plans.

Client/customer agrees to indemnify Better By Design, LLC for any claims by any third parties for any costs, losses, injuries or damages caused by any departure from the plans. This provisions covers departures from the plans by the client/customer, and also departures from the plans by any individual or entity with whom the client/customer enters these plans.

The client/customer acknowledges that the plans were prepared assuming that certain materials would be available, and the client/customer acknowledges that those materials may or may not be available at the time of construction. Better By Design, LLC shall not be liable to the client/customer for any costs, losses, injuries or damages caused to the client/customer by any departure from the materials contemplated when the plans were prepared.

Client/customer agrees to indemnify Better By Design, LLC for any claims by any third parties for any costs, losses, injuries or damages caused by any departure from the materials contemplated when the plans were prepared. This provision covers departures from materials by the client/customer, and also departures from materials by any individual or entity with whom the client/customer enters these plans.

The client/customer acknowledges that design errors are possible and the client/customer agrees to employ a licensed, insured, professional engineer/architect/contractor and/or sub-contractors to insure structural integrity and compliance with federal, state and local law, rules, codes and regulations.

Better By Design, LLC shall not be liable to the client/customer for any costs, losses, injuries or damages caused by design errors. Client/customer agrees to pursue his licensed, insured, professional engineer/architect/contractor and/or sub-contractors for any costs, losses, injuries or damages caused by design errors. And client/customer agrees to indemnify Better By Design, LLC for any claims by any third parties for any costs, losses, injuries or damages caused by design errors.

Client/customer agrees that scales given over drawings and dimensions given over scale.

Elevation drawings are conceptual only. Better By Design, LLC expresses no guarantee and assumes no liability for any differences between the drawings and the actual appearance of the structure when constructed.

Customer/client should verify topographic and subsurface conditions and adapt foundation plans accordingly.

Builders should verify materials, requirements, and availability and report any discrepancies to the customer/client.

The purchase of prints from Better By Design, LLC or their agents constitutes a client/customer status and grants a license to the client/customer to build one structure conceptualized by the plan. Changes and modifications to the original drawings (if the changes are not needed to be shown on the drawing) are permitted. However, full rights and title to the original plan and any derivative work of same is retained by Better By Design, LLC.

No plans produced by Better By Design, LLC may be reproduced by the client/customer, his agents or assigns, in any form without the express written consent of Better By Design, LLC. And in any event, Better By Design, LLC retains all rights, title, and interest in the original drawings and all copies. Copying or distributing the property of Better By Design, LLC in any form (hard copies, electronic media, etc.) is strictly prohibited. Violations may be subject to criminal or civil liability.

All parties acknowledge and agree that terms and conditions herein shall be construed according to the law of Indiana.

BUILDER SHALL VERIFY ALL DIMENSIONS BEFORE CONSTRUCTION

NOTE: ALL DIMENSIONS ARE BASED UPON AND DERIVED FROM FIELD MEASUREMENTS. WALL FINISHES, ACCESSABLILITY, MECHANICAL AND HUMAN ERROR MAY MAKE SOME FIELD ADJUSTMENTS NECESSARY.

IMPORTATNT NOTE:
ALL POSSIBLE CARE HAS BEEN TAKEN TO ASSURE THE ACCURACY OF DIMENSIONS, ROOF PITCH AND THE EXPECTED APPEARANCE OF THE FINISHED HOME FOR THIS REMODEL / ADDITION PLAN. ALL IS BASED UPON FIELD MEASURMENT OR THE ORIGINAL CONSTRUCTION PLANS OF THE EXISTING STRUCTURE. UNKNOWNS EXIST IN EVERY STRUCTURE THAT MAY BE REVEALED ONLY UPON DEMOLITION AND CONSTRUCTION AS WORK PROGRESSES. THEREFORE, THE BUILDER MAY HAVE TO MAKE FIELD ADJUSTMENTS BASED UPON ACTUAL DIMENSIONS AND CONDITIONS. BETTER BY DESIGN LLC NOR ITS OPERATIVES ACCEPT ANY RESPONSIBILITY FOR VARIATIONS OF DIMENSIONS, ROOF PITCH OR APPEARANCE OF THE FINISHED HOME.

BUILDER MUST DETERMINE THE FEASIBILITY OF REMOVING WALLS OR OTHER STRUCTURE. IF ROOF OR FLOOR BEARING WALLS OR BEAMS ARE TO BE ALTERED OR REMOVED, CARE MUST BE TAKEN TO SUPPORT EXISTING STRUCTURE BEFORE ALTERING OR REMOVING EXISTING SUPPORT. IT IS THE RESPONSIBILITY OF THE BUILDER AND OWNER TO ASSURE SAFETY AND STRUCTURAL INTEGRITY. BETTER BY DESIGN LLC PLANS ARE CONCEPTUAL AND AS SUCH DO NOT EXPRESS OR IMPLY THAT ALTERATION OR REMOVAL OF ANY EXISTING STRUCTURE IS SOUND PRACTICE FROM AN ARCHITECTURAL OR ENGINEERING PERSPECTIVE. BETTER BY DESIGN LLC ASSUMES NO RESPONSIBILITY FOR JOB SITE SAFETY OR FOR ANY INJURY OR DAMAGE RESULTING FROM THE BUILDERS ATTEMPT TO DEMOLISH, ALTER OR CONSTRUCT ANY STRUCTURE DEPICTED ON THIS PLAN.

RIGHT ELEVATION
SCALE: 1/4" = 1'-0"

LEFT ELEVATION
SCALE: 1/4" = 1'-0"

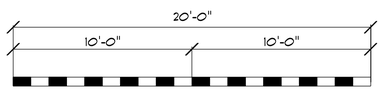

SCALE

THIS PAGE MAY BE PRINTED IN VARIOUS SIZES. TO DETERMINE SCALE ON THIS PAGE SIZE COMPARE RULER TO SCALE ABOVE. EACH BLOCK EQUALS 1 FOOT.

BETTER by DESIGN LLC

H3 PROPERTIES

DESIGN: • 2824 MONTGOMERY ST.
REVISED: 6/17/2022
DESIGNER: JWC
BETTER BY DESIGN
NEW ALBANY, IN
(502)741-2748
WWW.BBD-PLANS.COM
email- SALES@BBD-PLANS.COM

Use of these plans by the client/customer of Better By Design, LLC indicates that the client/customer understands and agrees to all of, but not limited to, the following terms and conditions of such use.

Better By Design, LLC its members, employees and/or agents, actual or apparent, assume no liability for design errors or omissions beyond the amount paid to Better By Design, LLC by the client/customer for the plans produced.

Better By Design, LLC members, employees and/or agents, actual or apparent, shall not be liable to the client/customer for any costs, losses, injuries or damages caused to the client/customer by any departure from the plans.

Client/customer agrees to indemnify Better By Design, LLC for any claims by any third parties for any costs, losses, injuries or damages caused by any departure from the plans. This provisions covers departures from the plans by the client/customer, and also departures from the plans by any individual or entity with whom the client/customer enters these plans.

The client/customer acknowledges that the plans were prepared assuming that certain materials would be available, and the client/customer acknowledges that those materials may or may not be available at the time of construction. Better By Design, LLC shall not be liable to the client/customer for any costs, losses, injuries or damages caused to the client/customer by any departure from the materials contemplated when the plans were prepared.

Client/customer agrees to indemnify Better By Design, LLC for any claims by any third parties for any costs, losses, injuries or damages caused by any departure from the materials contemplated when the plans were prepared. This provision covers departures from materials by the client/customer, and also departures from materials by any individual or entity with whom the client/customer enters these plans.

The client/customer acknowledges that design errors are possible and the client/customer agrees to employ a licensed, insured, professional engineer/architect/contractor and/or sub-contractors to insure structural integrity and compliance with local, state and/or federal laws, rules, codes and regulations.

Better By Design, LLC shall not be liable to the client/customer for any costs, losses, injuries or damages caused by design errors. Client/customer agrees to pursue his licensed, insured, professional engineer/architect/contractor and/or sub-contractors and/or Better By Design, LLC remedies in the event of design errors. And client/customer agrees to indemnify Better By Design, LLC for any claims by any third parties for any costs, losses, injuries or damages caused by design errors.

Client/customer agrees that scales given over drawings and dimensions given over scale.

Elevation drawings are conceptual only. Better By Design, LLC expresses no guarantee and assumes no liability for any differences between the drawings and the actual appearance of the structure when constructed.

Customer/client should verify topographic and subsurface conditions and adapt foundation plans accordingly.

Builders should verify materials, requirements, and availability and report any discrepancies to the customer/client.

The purchase of prints from Better By Design, LLC or their agents constitutes a client/customer relationship and grants a license to the client/customer to build one structure conceptualized by the plan. Changes and modifications to the original drawings (if the changes are not related to be shown on the drawing) are permitted. However, full rights and title to the original plan and any derivative work of same is retained by Better By Design, LLC.

No plans produced by Better By Design, LLC may be reproduced by the client/customer, his agents or assigns, in any form without the express written consent of Better By Design, LLC. And in any event, Better By Design, LLC retains all rights, title and interest in the original drawings and all copies. Copying or distributing the property of Better By Design, LLC in any form (hard copies, electronic media, etc.) is strictly prohibited. Violations may be subject to criminal or civil liability.

All parties acknowledge and agree that terms and conditions herein shall be construed according to the laws of Indiana.

BUILDER SHALL VERIFY ALL DIMENSIONS BEFORE CONSTRUCTION

NOTE: ALL DIMENSIONS ARE BASED UPON AND DERIVED FROM FIELD MEASUREMENTS. WALL FINISHES, ACCESSABILITY, MECHANICAL AND HUMAN ERROR MAY MAKE SOME FIELD ADJUSTMENTS NECESSARY.

IMPORTATNT NOTE:
ALL POSSIBLE CARE HAS BEEN TAKEN TO ASSURE THE ACCURACY OF DIMENSIONS, ROOF PITCH AND THE EXPECTED APPEARANCE OF THE FINISHED HOME FOR THIS REMODEL / ADDITION PLAN. ALL IS BASED UPON FIELD MEASURMENT OR THE ORIGINAL CONSTRUCTION PLANS OF THE EXISTING STRUCTURE. UNKNOWNS EXIST IN EVERY STRUCTURE THAT MAY BE REVEALED ONLY UPON DEMOLITION AND CONSTRUCTION AS WORK PROGRESSES. THEREFORE, THE BUILDER MAY HAVE TO MAKE FIELD ADJUSTMENTS BASED UPON ACTUAL DIMENSIONS AND CONDITIONS. BETTER BY DESIGN LLC NOR ITS OPERATIVES ACCEPT ANY RESPONSIBILITY FOR VARIATIONS OF DIMENSIONS, ROOF PITCH OR APPEARANCE OF THE FINISHED HOME.

BUILDER MUST DETERMINE THE FEASIBILITY OF REMOVING WALLS OR OTHER STRUCTURE. IF ROOF OR FLOOR BEARING WALLS OR BEAMS ARE TO BE ALTERED OR REMOVED, CARE MUST BE TAKEN TO SUPPORT EXISTING STRUCTURE BEFORE ALTERING OR REMOVING EXISTING SUPPORT. IT IS THE RESPONSIBILITY OF THE BUILDER AND OWNER TO ASSURE SAFETY AND STRUCTURAL INTEGRITY. BETTER BY DESIGN LLC PLANS ARE CONCEPTUAL AND AS SUCH DO NOT EXPRESS OR IMPLY THAT ALTERATION OR REMOVAL OF ANY EXISTING STRUCTURE IS SOUND PRACTICE FROM AN ARCHITECTURAL OR ENGINEERING PERSPECTIVE. BETTER BY DESIGN LLC ASSUMES NO RESPONSIBILITY FOR JOB SITE SAFETY OR FOR ANY INJURY OR DAMAGE RESULTING FROM THE BUILDERS ATTEMPT TO DEMOLISH, ALTER OR CONSTRUCT ANY STRUCTURE DEPICTED ON THIS PLAN.

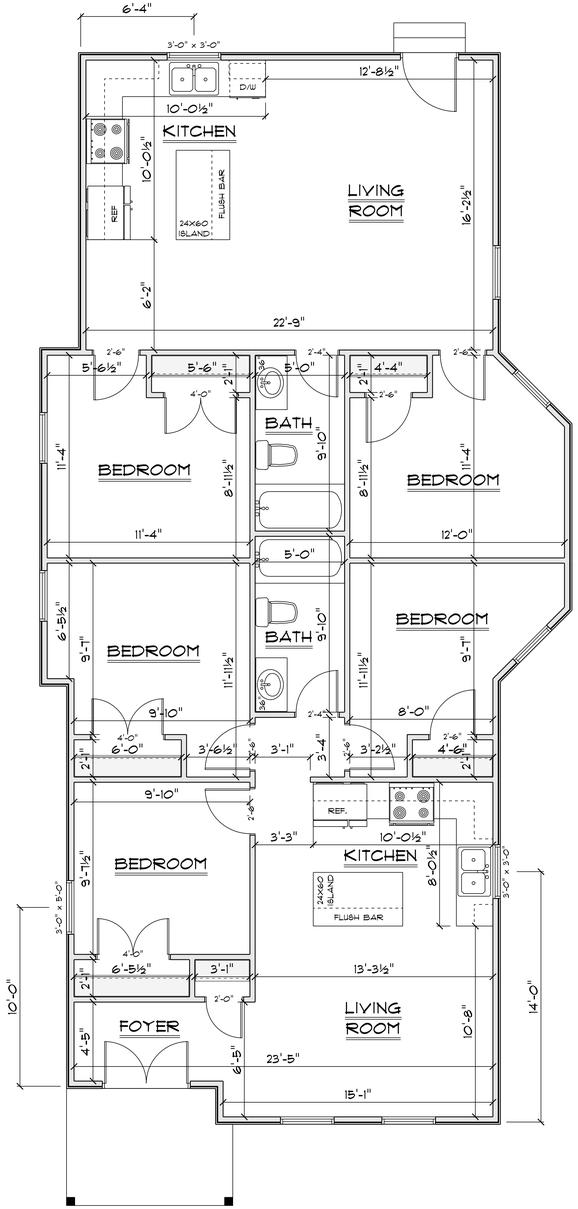

NEW MAIN FLOOR

SCALE: 1/4" = 1'-0"

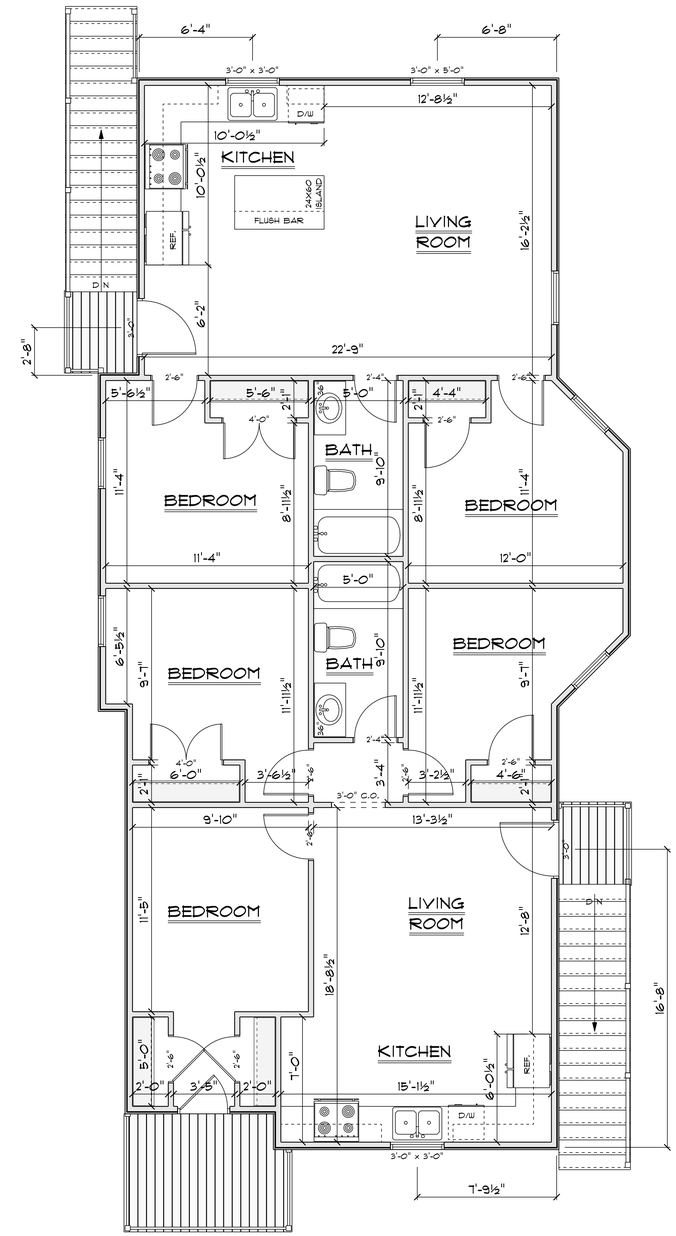

NEW UPPER FLOOR

SCALE: 1/4" = 1'-0"

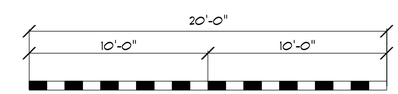

SCALE

THIS PAGE MAY BE PRINTED IN VARIOUS SIZES. TO DETERMINE SCALE ON THIS PAGE SIZE COMPARE RULER TO SCALE ABOVE. EACH BLOCK EQUALS 1 FOOT.

BETTER by DESIGN LLC

H3 PROPERTIES

DESIGN: • 2824 MONTGOMERY ST.
REVISED: 6/17/2022
DESIGNER: JWC
BETTER BY DESIGN
NEW ALBANY, IN
(502)741-2748
WWW.BBD-PLANS.COM
email: SALES@BBD-PLANS.COM

2020.2.3

6/17/2022

09:37 AM

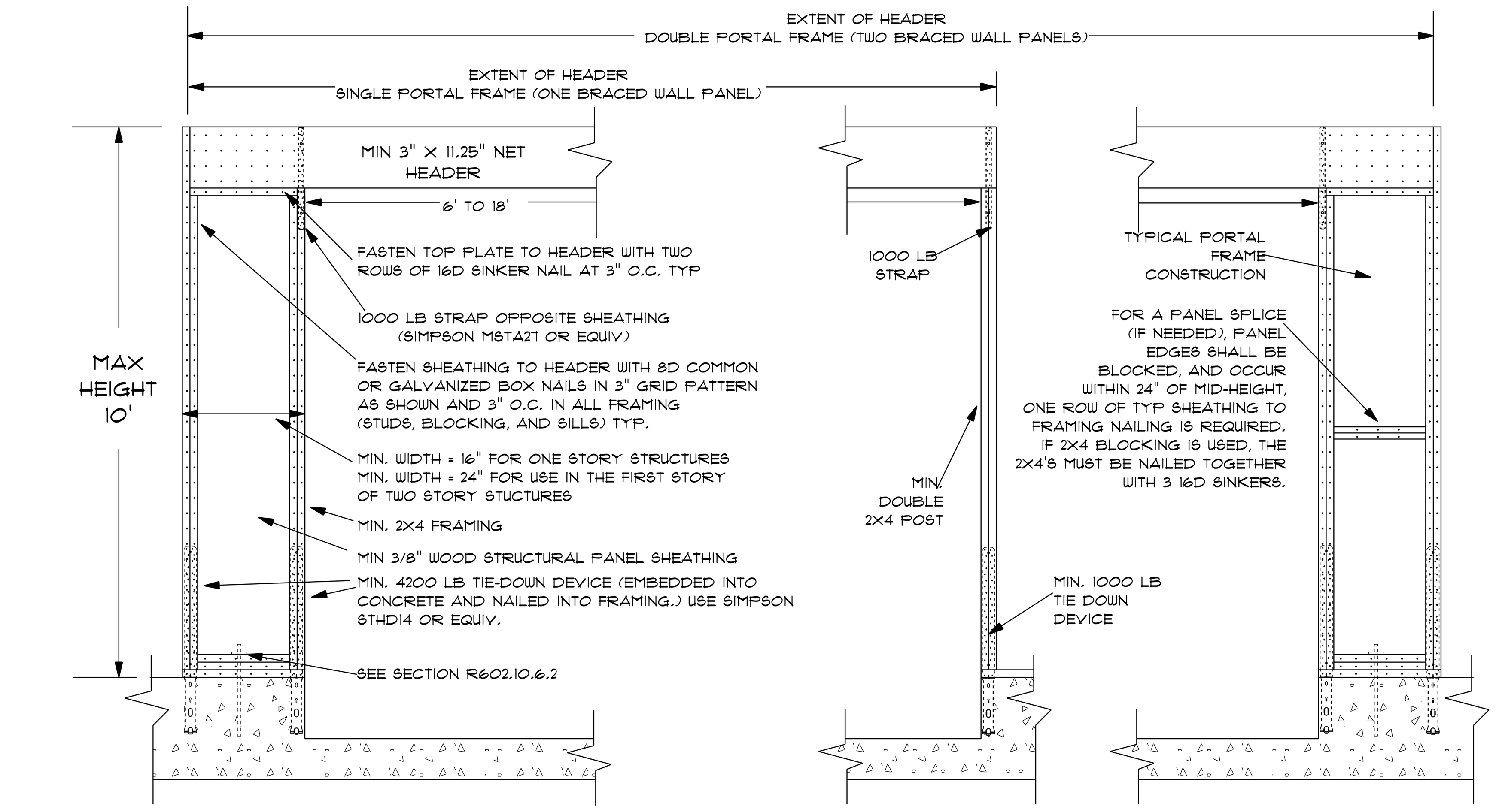

ALTERNATE BRACED WALL PANEL ADJACENT TO A DOOR OR WINDOW OPENING
(NOT TO SCALE)

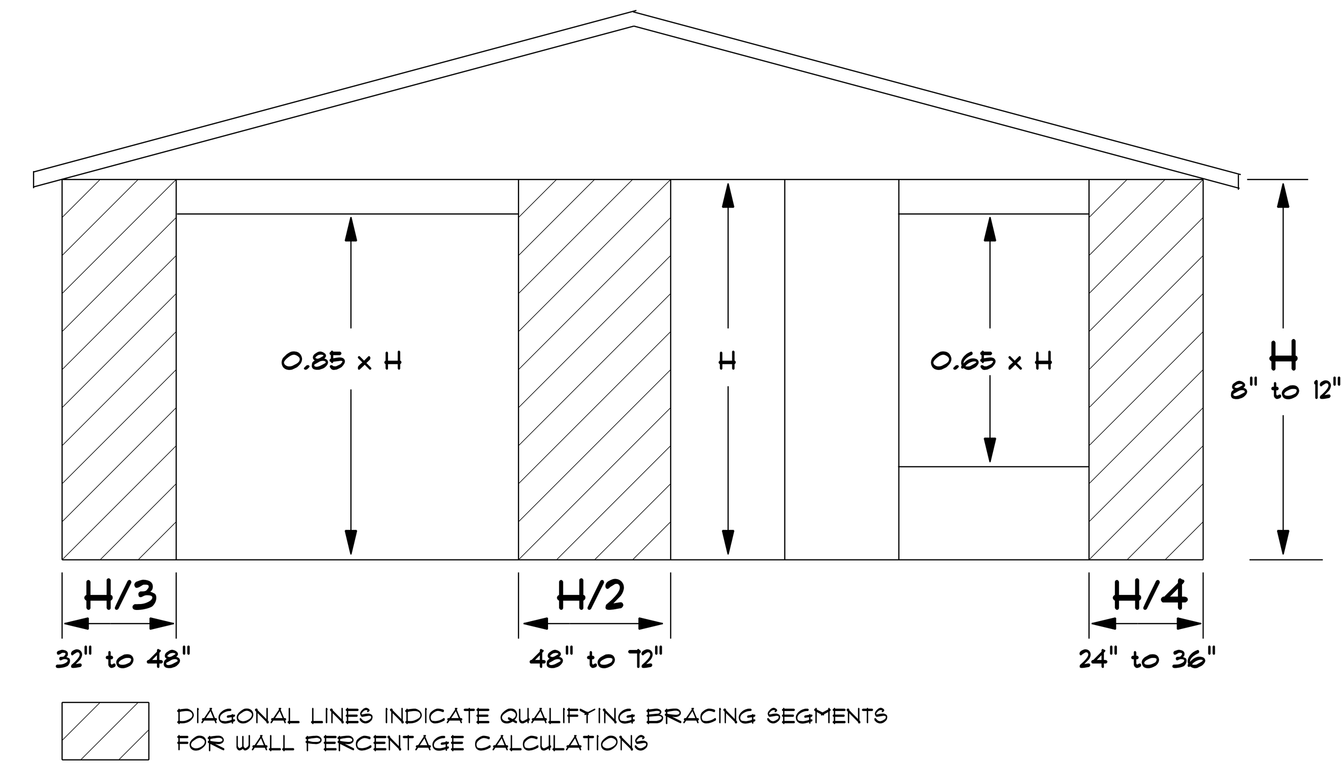

CONTINUOUS WOOD STRUCTURAL PANEL SHEATHING
(NOT TO SCALE)

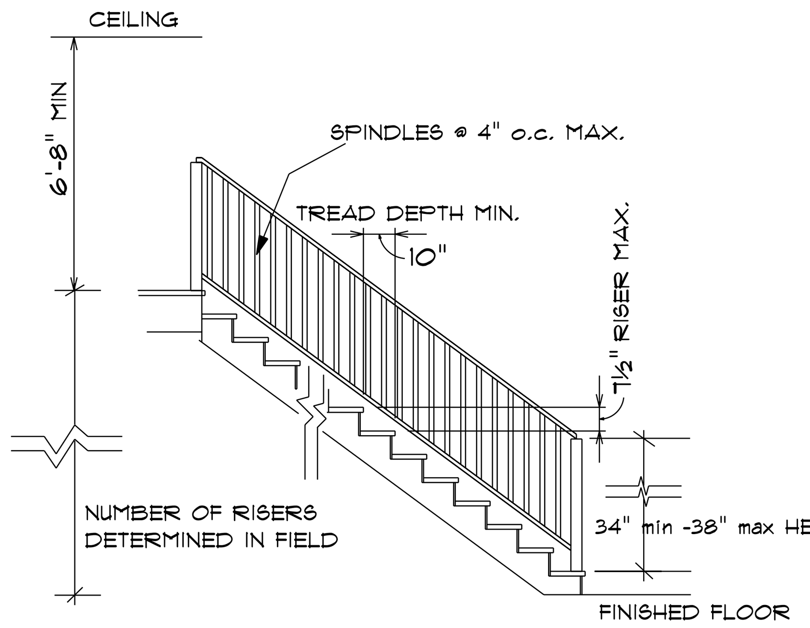

TYPICAL STAIR DETAIL
(NOT TO SCALE)

NOTE: IT IS IMPOSSIBLE TO DEPICT AND DESCRIBE HEREIN EVERY APPLICATION AND EXCEPTION INCLUDED IN THE BUILDING CODE. FOR MORE INFORMATION CONSULT CURRENT CODES OR YOUR LOCAL CODE ENFORCEMENT OFFICIAL.

NOTE: ANY WINDOW LESS THAN 18" ABOVE FFE OR WITHIN 24" OF ANY DOOR AND LESS THAN 60" ABOVE FFE MUST BE SAFETY GLASS.

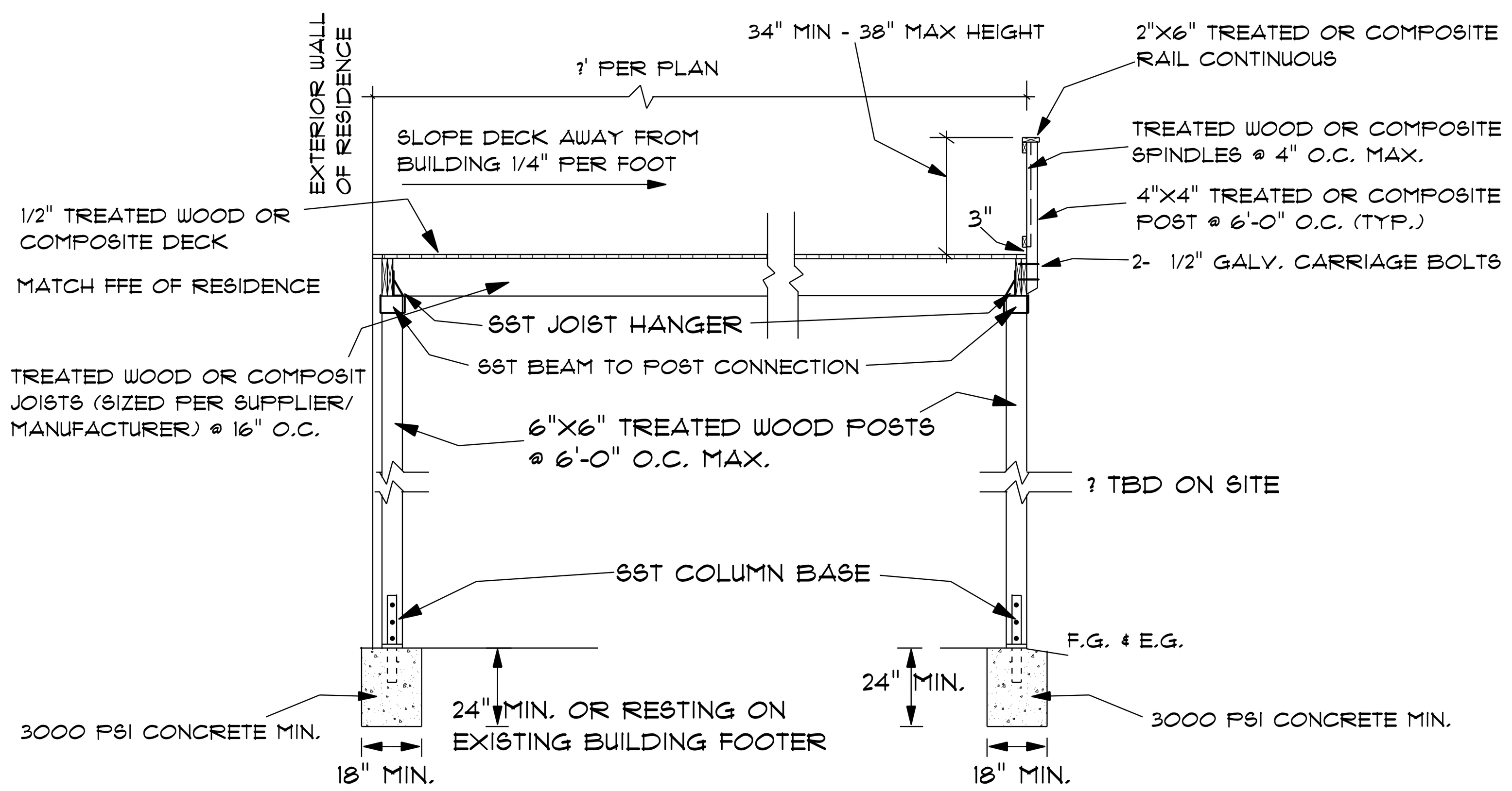

WOOD DECK DETAIL
(NOT TO SCALE)

NOTES:
1. ALL SIMPSON STRONG-TIE (SST) CONNECTORS & HANGERS SHALL BE RATED FOR EXTERIOR USE & INSTALLED PER MANUFACTURE RECOMMENDATIONS

2. ALL DECK LUMBER SHALL BE TREATED LUMBER OR COMPOSITE FOR EXTERIOR APPLICATIONS

TYPICAL RESIDENTIAL DWELLING DETAILS

MATERIALS SPECIFIED MAY BE CHANGED AT BUILDER'S DISCRETION BASED UPON AVAILABILITY, COST OR CODE REQUIREMENTS. FOR SPECIFIC MATERIALS TO BE USED REFER TO HOME OWNERS / BUILDER CONTRACT.

BETTER by DESIGN LLC

WE AT BETTER BY DESIGN ARE PLEASED TO RECOMMEND THE FOLLOWING SUPPLIERS OF MATERIALS AND SERVICES FOR YOUR CONSTRUCTION PROJECT.

DIVERSIFIED INSURANCE GROUP
We find the best insurance solution for you!
AUTO • HOME • LIFE • BUSINESS • FARM
Call today for a FREE quote!
(812) 283-3500
BBB RATING A+
1602 E. 8TH STREET, JEFFERSONVILLE, IN. 47130

Custom Cabinetry available in finishes ranging from modern paints and stains to primitive distressed and knotty rustic.

No E-Mail or Internet	Eicher's Furniture & Cabinetry	(812) 289-1399
We are Amish	8518 Tunnel Mill Rd	Call for an appointment
Please call Mon-Sat	Charlestown, IN 47111	If possible

AGAPÉ POOLS
Phone: 812.796.9031
Web: www.agapebuiltpools.com
Email: Sales@agapebuiltpools.com

SONNE STEEL
* Steel Fabrication & Erection
* Residential & Commercial Steel Construction

3617 Matingly Road
Buckner, KY 40010
www.sonnesteel.com
Office- (502) 222-0099
Fax- (502) 222-9001

K-I Lumber & Building Materials
"VOLUME-PRICE-SERVICE" SINCE 1932
OVER 80 YEARS SERVING THE KENTUCKIANA AREA, WE HAVE EVERYTHING YOU NEED TO BUILD YOUR DREAM HOME. START TO FINISH!

5301 U.S. Highway 31 North
Clarksville, IN 47129
812-283-7000
www.ki-lumber.com

COBB HEATING & COOLING, INC.
Residential•Commercial•Service•Installation
812-738-6060
1610 S Gethsemane Rd NW / PO Box 520
Corydon, IN 47112
cobbhvac@aol.com

DESIGN #: 2824 MONTGOMERY ST. PROJECT: H3 PROPERTIES

'X' BUILDER TO MARK THOSE THAT APPLY 'X'

☐ TYPICAL FRAME ROOF:
ASPHALT SHINGLES AS PER OWNER
7/16" ROOFING PLYWOOD OR OSB
SHEETING RATED FOR 16" SPAN
'H' CLIPS
2x8 RIDGEBOARD
2x6 RAFTERS @ 16" o.c.
2x4 COLLAR TIES @ 48" o.c. w/
1x4 RIBBON TIE
2x6 CEILG JOISTS @ 16" o.c. w/
2x4 RIBBON TIE
R38 BATT INSUL.
5/8" CEILING BOARD
TAPED & SANDED

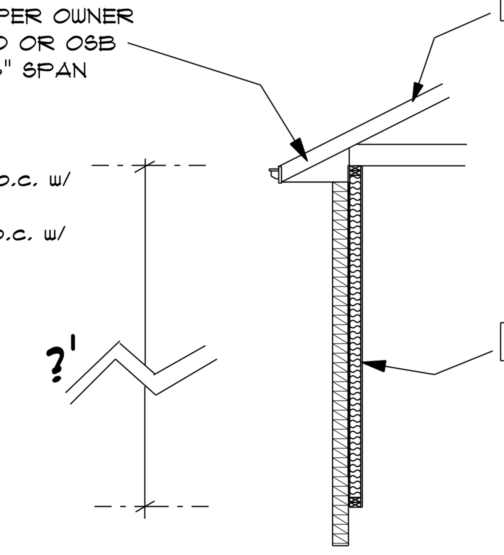

☐ TYPICAL TRUSS ROOF:
ASPHALT SHINGLES AS PER OWNER
7/16" ROOFING PLYWOOD OR OSB
SHEETING RATED FOR 24" SPAN
'H' CLIPS
2x8 BLOCKING AT PEAK
PRE-ENGINEERED TRUSSES @ 24" o.c.
2x4 TRUSS BRACING PER MANUFACTURER
R38 BATT INSULATION
5/8" CEILING BOARD
TAPED & SANDED

☐ TYPICAL 2x4 ☐ 2X6 BRICK EXTERIOR WALL:
FACE BRICK
7 GAUGE CORRUGATED
GALVANIZED METAL BRICK TIES
1" AIR SPACE
7/16" PLYWOOD SHEATHING
2x4 / 2X6 STUDS @ 16" o.c.
R13 BATT INSULATION
1/2" DRYWALL
TAPED & SANDED

TYPICAL 2X4 / 2X6 BRICK EXTERIOR WALL & ROOF

☐ TYPICAL FRAME ROOF:
ASPHALT SHINGLES AS PER OWNER
7/16" ROOFING PLYWOOD OR OSB
SHEETING RATED FOR 16" SPAN
'H' CLIPS
2x8 RIDGEBOARD
2x6 RAFTERS @ 16" o.c.
2x4 COLLAR TIES @ 48" o.c. w/
1x4 RIBBON TIE
2x6 CEILG JOISTS @ 16" o.c. w/
2x4 RIBBON TIE
R38 BATT INSUL.
5/8" CEILING BOARD
TAPED & SANDED

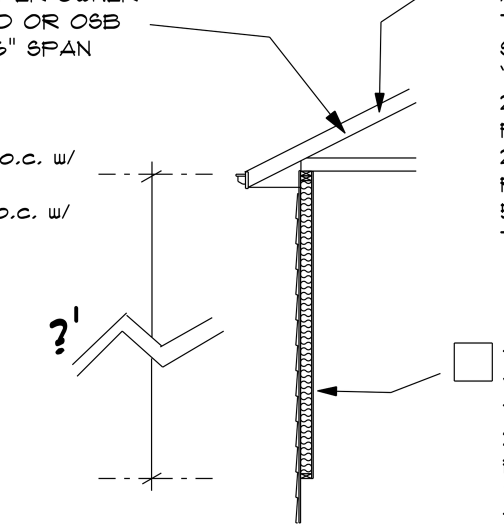

☐ TYPICAL TRUSS ROOF:
ASPHALT SHINGLES AS PER OWNER
7/16" ROOFING PLYWOOD OR OSB
SHEETING RATED FOR 24" SPAN
'H' CLIPS
2x8 BLOCKING AT PEAK
PRE-ENGINEERED TRUSSES @ 24" o.c.
2x4 TRUSS BRACING PER MANUFACTURER
R38 BATT INSULATION
5/8" CEILING BOARD
TAPED & SANDED

☐ TYPICAL 2x4 ☐ 2X6 SIDING EXTERIOR WALL:
VINYL SIDING
7/16" PLYWOOD SHEATHING
2x4 / 2X6 STUDS @ 16" o.c.
R13 BATT INSULATION
1/2" DRYWALL
TAPED & SANDED

TYPICAL 2X4 / 2X6 SIDING WALL & ROOF

STEEL OR MANUFACTURED WOOD BEAM SIZED
AND SUPPORTED PER MANUFACTURER

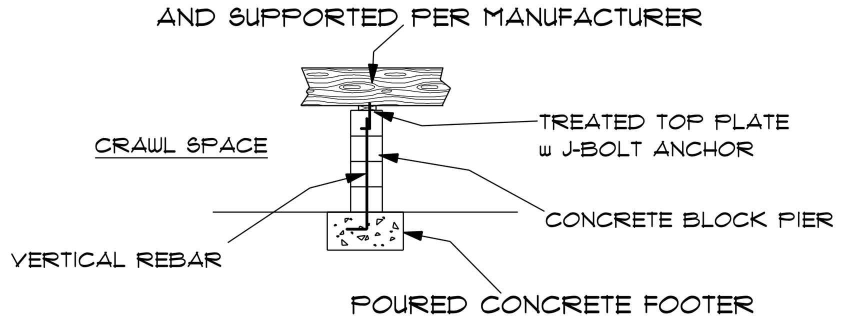

☐ CRAWL SPACE INTERIOR BEAM SUPPORT

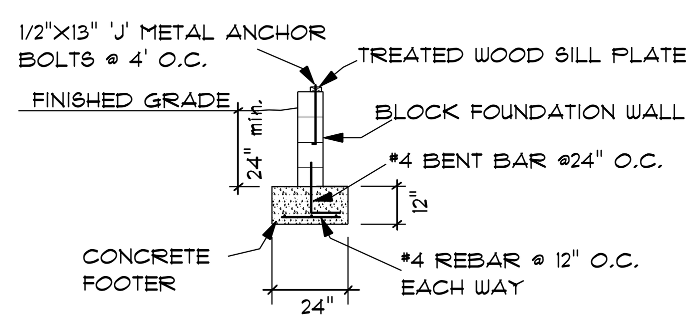

☐ CRAWL SPACE FOOTING & BLOCK FOUNDATION SECTION

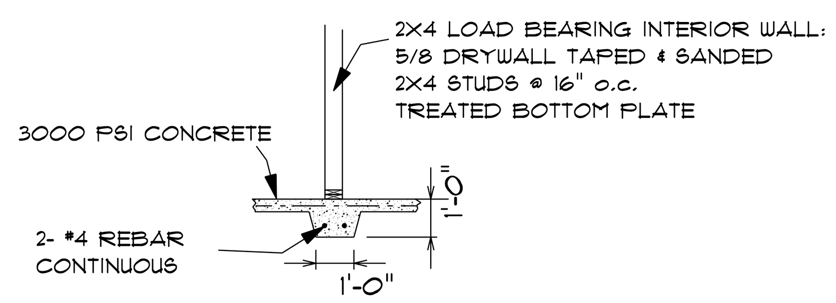

☐ GRADE BEAM FOR INTERIOR LOAD BEARING WALLS ON SLAB

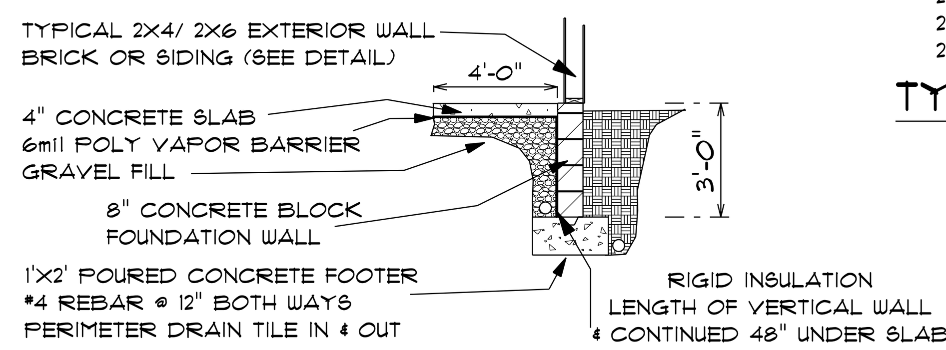

☐ SLAB FOOTING & BLOCK FOUNDATION SECTION

☐ TYPICAL 2X10 SECOND FLOOR SYSTEM:
FINISH FLOOR ON
3/4" T&G SUBFLOOR
SCREWED & GLUED
2x10 FLOOR JOISTS @ 16" o.c. w/
2x2 CROSS BRIDGING
5/8" CEILING BOARD
TAPED & SANDED

☐ TYPICAL 2X10 FIRST FLOOR SYSTEM:
FINISH FLOOR ON
3/4" T&G SUBFLOOR
SCREWED & GLUED
2x10 FLOOR JOISTS @ 16" o.c. w/
2x2 CROSS BRIDGING
2X4 TREATED TOP PLATE

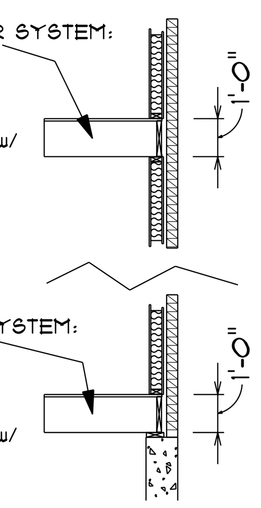

TYPICAL 2X10 FLOOR SYSTEM

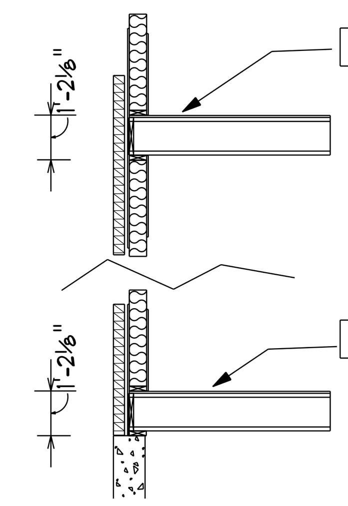

☐ TYPICAL I-JOIST SECOND FLOOR SYSTEM:
FINISHED FLOOR ON
3/4" T&G SUBFLOOR
GLUED AND SCREWED
11-7/8" I-JOISTS PER MANUFACTURER
5/8" CEILING BOARD
TAPED & SANDED

☐ TYPICAL I-JOIST FIRST FLOOR SYSTEM:
FINISHED FLOOR ON
3/4" T&G SUBFLOOR
GLUED AND SCREWED
11-7/8" I-JOISTS PER MANUFACTURER
2X6 TREATED PLATE

TYPICAL I-JOIST FLOOR SYSTEM

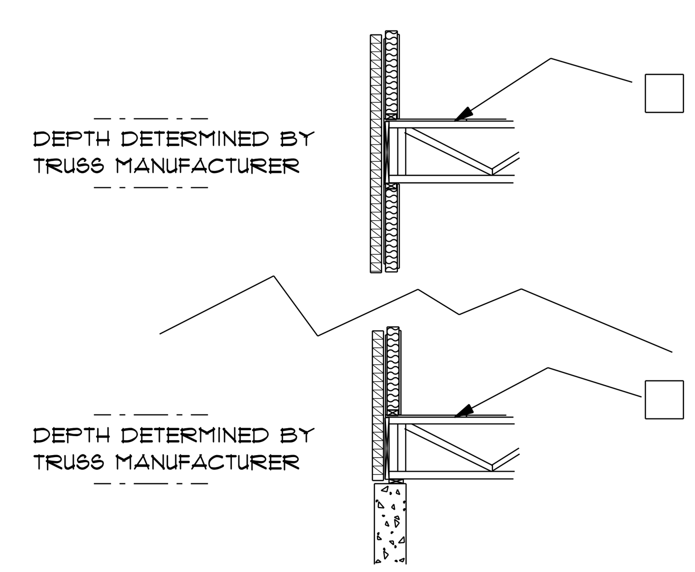

☐ TYPICAL SECOND FLOOR TRUSS SYSTEM:
3/4" T&G SUBFLOOR
GLUED AND SCREWED
FLOOR TRUSS PER MANUFACTURER
TRUSS BRACING / STRONGBACKS AS REQUIRED
5/8 CEILING BOARD
TAPED & SANDED

☐ TYPICAL FIRST FLOOR TRUSS SYSTEM:
3/4" T&G SUBFLOOR
GLUED AND SCREWED
FLOOR TRUSS PER MANUFACTURER
TRUSS BRACING / STRONGBACKS AS REQUIRED
2X4 TREATED PLATE

TYPICAL FLOOR TRUSS FLOOR SYSTEM

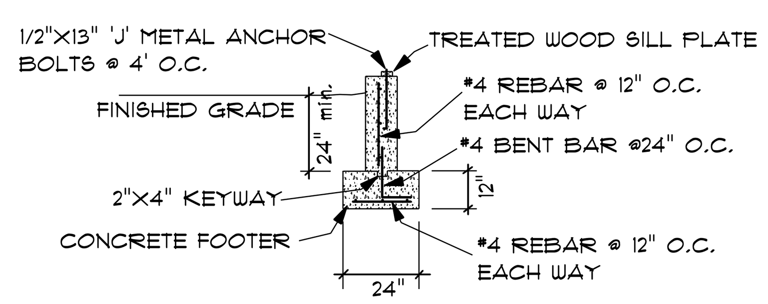

☐ CRAWL SPACE FOOTING & POURED CONCRETE FOUNDATION WALL SECTION

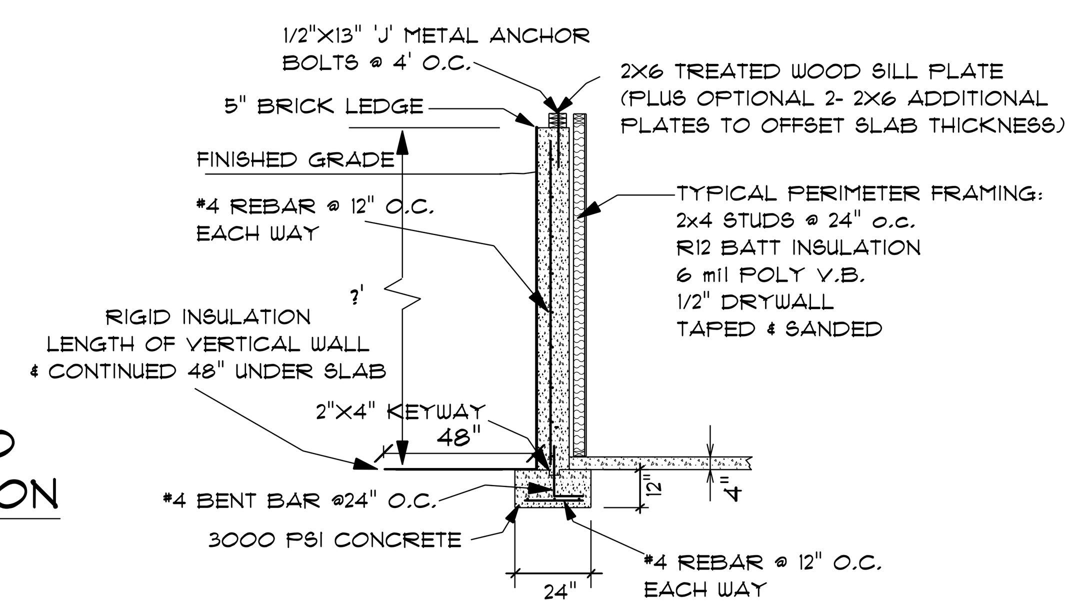

☐ FOOTING & POURED CONCRETE BASEMENT WALL SECTION

TYPICAL CROSS SECTIONS

SINGLE & MULTIPLE STORY RESIDENTIAL DWELLINGS

BUILDER MAY MARK ON THIS PAGE THOSE SECTIONS & DETAILS THAT APPLY TO THIS SECIFIC PROJECT. MATERIALS SPECIFIED MAY BE CHANGED AT BUILDER'S DISCRETION BASED UPON AVAILABLILITY, COST OR CODE REQUIREMENTS. FOR SPECIFIC MATERIALS TO BE USED REFER TO HOMEOWNER / BUILDER CONTRACT.

Use of these plans by the client/customer of Better By Design, LLC indicate that the client/customer understands and agrees to all of, but not limited to, the following terms and conditions of such use.
Better By Design, LLC its members, employees and/or agents, actual or apparent assume no liability for design errors or omissions beyond the amount paid to Better By Design, LLC by the client/customer for the plans produced.
Better By Design, LLC members, employees and/or agents, actual or apparent shall not be liable to the client/customer for any costs, losses, injuries or damages caused to the client/customer by any departure from the plans.
Client/customer agrees to indemnify Better By Design, LLC for any claims by any third parties for any costs. losses, injuries or damages caused by any departure from the plans. This provisions covers departures from the plans by the client/customer, and also departures from the plans by any individual or entity with whom the client/customer shares these plans.
The client/customer acknowledges that the plans were prepared assuming that certain materials would be available, and the client/customer acknowledges that those materials may or may not be available at the time of construction. Better By Design, LLC shall not be liable to the client/customer for any costs, losses, injuries or damages caused to the client/customer by any departure from the materials contemplated when the plans were prepared, Client/customer agrees to indemnify Better By Design, LLC for any claims by any third parties for any costs, losses, injuries or damages caused by any departure from the materials contemplated when the plans were prepared.
This provision covers departures from materials by the client customer, and also departures from materials by any individual or entity with whom the client/customer shares these plans.
The client/customer acknowledges that design errors are possible and the client/customer agrees to employ a licensed, insured, professional engineer/architect/contractor and/or sub-contractors to insure structural integrity and compliance with federal, state and local laws, rules, codes and regulations.
Better By Design, LLC shall not be liable to the client/customer for any costs, losses, injuries or damages caused by design errors. Client/customer agrees to pursue his licensed, insured, professional engineer/architect/contractor and/or sub-contractors and to hold Better By Design, LLC harmless in the event of design errors. And client/customer agrees to indemnify Better By Design, LLC for any claims by any third parties for any costs, losses, injuries or damages caused by design errors.
Client/customer agrees that codes govern over drawings and dimensions govern over scale.
Elevation drawings are conceptual only. Better By Design, LLC expresses no guarantee and assumes no liability for any differences between the drawings and the actual appearance of the structure when constructed.
Customer/client should verify topographic and subsurface conditions and adapt foundation plans accordingly.
Bidders should verify materials, requirements, and availability and report any discrepancies to the customer/client.
The purchase of prints from Better By Design, LLC or their agents constitutes a client/customer status and grants a license to the client/customer to build one structure conceptualized by the plan. Changes and modifications to the original drawings (if the changes are not needed to be shown on the drawing) are permitted. However, full rights and title to the original plan and any derivative work of same is retained by Better By Design, LLC.
No plans produced by Better By Design, LLC may be reproduced by the client/customer, his agents or assigns, in any form without the express written consent of Better By Design, LLC. And in any event, Better By Design, LLC retains all right, title, and interest in the original drawings and all copies. Copying or distributing the property of Better By Design, LLC in any form (hard copies, electronic media, etc.) is strictly prohibited. Violations may be subject to criminal or civil liability.
All parties acknowledge and agree that terms and conditions herein shall be construed according to the laws of Indiana.

RENAISSANCE DESIGN BUILD, INC.

INDIANA OFFICE
117 S. Indiana Avenue
Sellersburg, IN 47172
Tel: 812-246-5897
Fax: 812-248-4320

KENTUCKY OFFICE
1012 S. Fourth Street
Louisville, KY 40203
Tel: 502-424-8373
Fax: 502-587-0931

ENGINEERING • LAND SURVEY • DESIGN • BUILDING INVESTIGATIONS • RADON TESTING
CONSTRUCTION MANAGEMENT • ENGINEERING INVESTIGATION SERVICES • PLANNING
HOME INSPECTIONS • ENERGY AUDITS • HERS RATINGS • MOLD TESTING
SEPTIC DYE TESTING • WOOD DESTROYING INSECT INSPECTIONS
WATER WELL INSPECTIONS • FIRE AND EXPLOSION INVESTIGATION
FEMA FLOOD CERTIFICATION • PHASE I ENVIRONMENTAL SITE ASSESSMENT
REGULATORY PERMITTING ASSISTANCE
WWW.RENAISSANCEDESIGNBUILD.COM
EMAIL: RDBI@SBCGLOBAL.NET

Seeding • Sodding • Grading • Tree Planting • Fire Pits • Patios • Lawn Treatments • Retaining Walls • Landscape Design & Installation

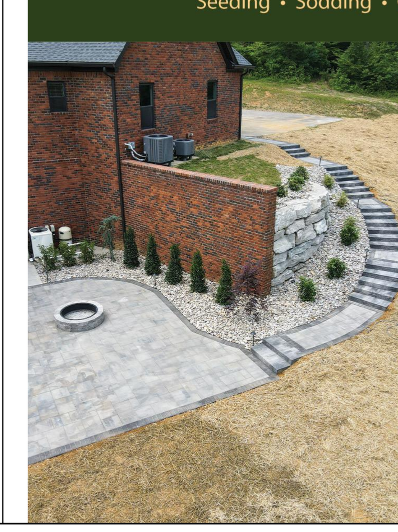

Spend Your Time Doing What You Love
Hire Us to do What We Love

LAMBS LAWN SERVICE
&
LANDSCAPING L.L.C.
WWW.LAMBSLAWN.COM

5343 Buck Creek Rd
Floyds Knobs, IN., 47119
812-923-6894
Info@lambslawn.com

BETTER by DESIGN LLC

WE AT BETTER BY DESIGN ARE PLEASED TO RECOMMEND THE FOLLOWING SUPPLIERS OF MATERIALS AND SERVICES FOR YOUR CONSTRUCTION PROJECT.

ISENBERG
SPRAY FOAM INSULATION
OPEN & CLOSED CELL FOAMS

Specializing in
Open and Closed Cell Spray Foam Insulation
Blown-In Cellulose or Fiberglass for Attics
Foundation Waterproofing for New Construction

502-554-2501
IsenbergSprayFoam.com
Charlie@IsenbergSprayFoam.com

CORONADO Stone
812-284-2845

THE LEADER IN MANUFACTURED STONE

High Caliber Cabinetry
KITCHENS, BATHS & MORE
Your Kitchen & Bath Professionals
Dedicated design, sales and service
812-246-5550
767 Old State Road 60, Sellersburg, IN

GHK TRUSS, LLC
Mike Gilley
President
P.O. Box 2696
521 N. Clark Blvd.
Clarksville, IN 47131-2696
office:812-282-6600
fax:812-282-6036
cell:502-548-2285
email:ghktrussllc@sbcglobal.net

DESIGN #: 2824 MONTGOMERY ST. PROJECT: H3 PROPERTIES